MBO

Paper Folding Machines

B123

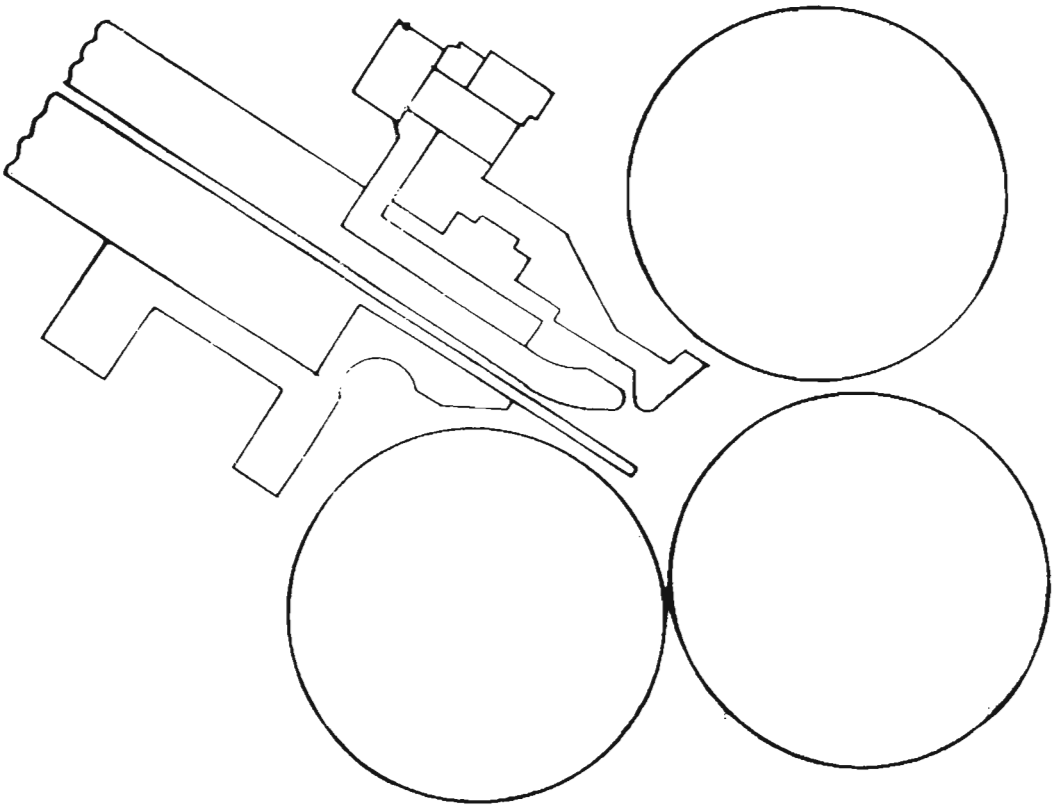

Operation and Maintenance Manual

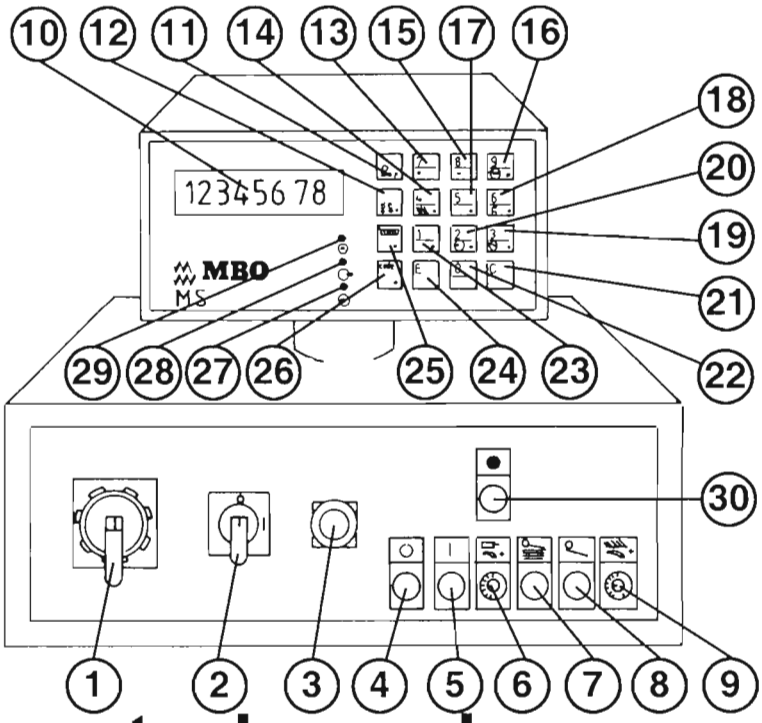

Main control panel

1 MAIN SWITCH
2 Turn ON/OFF switch for compressor
3 EMERGENCY-STOP button
4 Red dutton for machine STOP
5 Black button for machine START
6 Main drive SPEED POTENTIOMETRE
7 White button for SHEET INFEED
8 White button for SINGLE SHEET INFEED
9 Transporte table SPEED POTENTIOMETRE
10 8- digit display
11 Button suction length
12 Button suction gap
13 Button with double function 7 / +
14 Button with multliple function 4/ speed up delievery/ Kicker/ marking device
15 Button with double function 8 / -
16 Button with double function 9 / speed indication
17 Button with double function 5 / interruption suction wheel
18 Button with double function 6 / current productions speed / hrs
19 Button with double function 3 / total counter at infeed
20 Button with double function 2 / total counter at exit
21 Button Clear (delete)
22 Button 0
23 Button 1
24 Button Enter (confirm)
25 Button Batch preselection
26 Button Code
27 Diagnosis LED photocell at exit B 43 (Option)
28 Diagnosis LED photocell at suction wheel B 2
29 Diagnosis LED slot initiator B 1
30 Green indicator light for MACHINE RLEASE

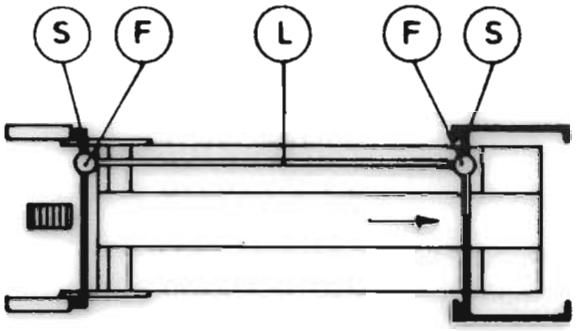

1) Loading of feeder.

1.1) Setting of side lay (L)

1.1.2) Set sidelay (L) according to scale (S) for half width of sheet. Sidelay can be used on either left or right side.

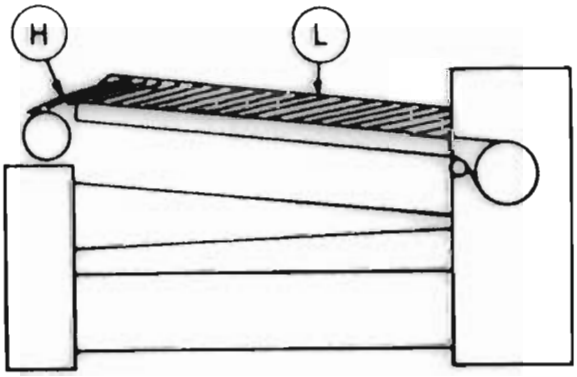

1.2) If tabe of stock reach left end of table (H) push the bleu sheet feed botton to start moremente of tapes around drum towards suction wheel.

1.2.1) Sheets can be loaded up to top of sidelay (L).

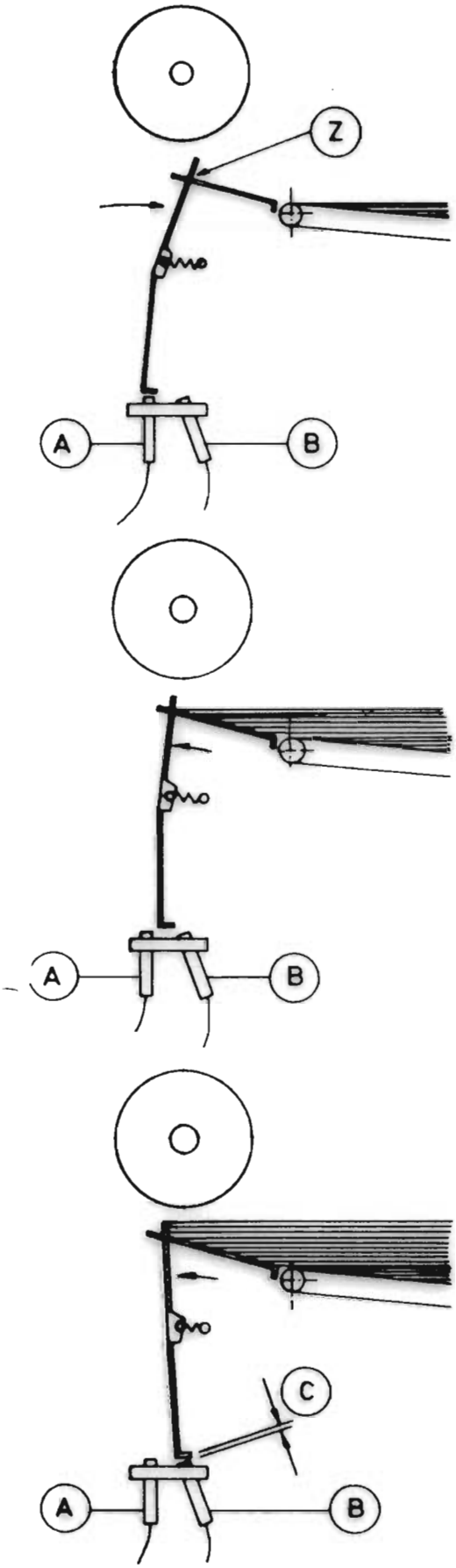

2) Sheet-transport-control

Sheet transfer form top boardaround the drum to suction wheel is made with a two speed system

2.1) A feelertongue (Z) is moving to the right. If no sheets are under suction drum, in this position sensor (A) switch on trans port mechanism to "fast speed"

2.1.1) Fast speed approx 6 feet/min.

2.2) Working Position:

If sheets rache tongue (Z) they push it to the left

2.2.1) The bottom of tongue is leaving sensor (A) and switch transport to "slow speed"

2.2.2) Slow speed approx 2 feet/min.

2.3) Final Position:

The sheets are pushing tongue (Z) more to the left

2.3.1) The bottom of tongue is reachine sensor (B) and " stop the transport"

2.4) The distance (C) from bottom of tongue to sensor (A) or (B) must be between 0,5 and 1 mm

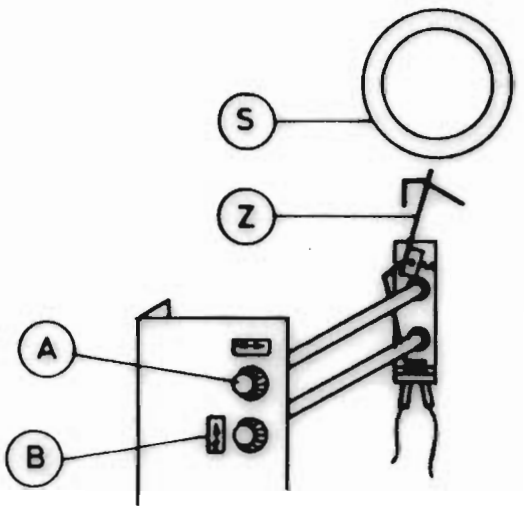

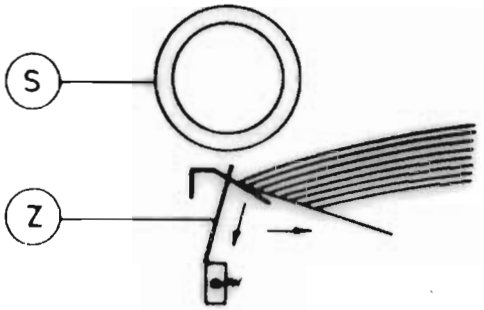

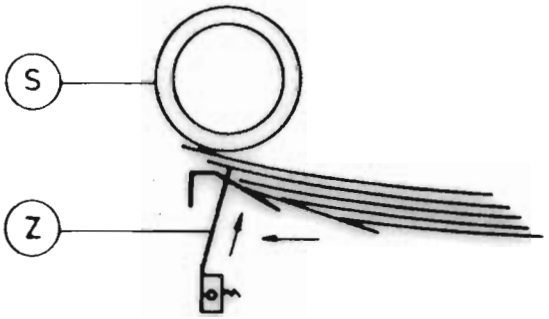

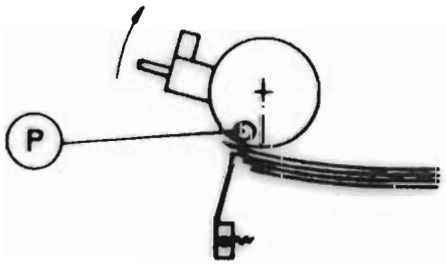

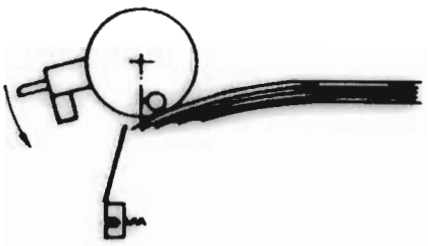

2.5) Adjustment of feeler-tongue

Feelertongue (Z) is adjustable in two dimensions. This is important if front edge of sheet are curled either up or down

2.5.1) On knob (A) move tongue (Z) forward or back

2.5.2) On knob (B) move tongue (Z) up or down

2.5.3) If using down-curled sheets adjust tongue (Z) down on knob (B)

2.5.4) At same time adjust tongue (Z) back on knob (A) (to right)

2.5.5) If using up-curled sheet adjust tongue (Z) up on knob (B) other wise sheets are moving between tongue (Z) and suction wheel (S) to fare forwards (overrun) result are doublesheets

2.5.6) At same time adjust tongue (Z) to the left (forwards)

2.6) If handling curled sheets the pick up position (P) on suction drum (S) can be changed

2.6.1) On up-curled sheets move pick up position (P) forwards (Clockwise)

2.6.2) On down-curled sheets move pick up position (P) backwards (counter clockwise)

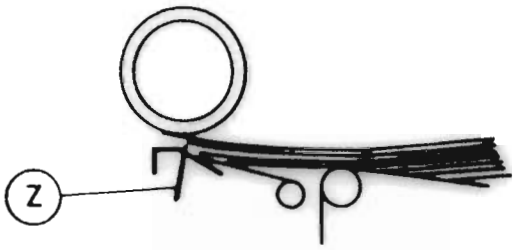

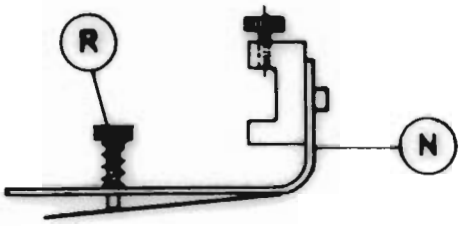

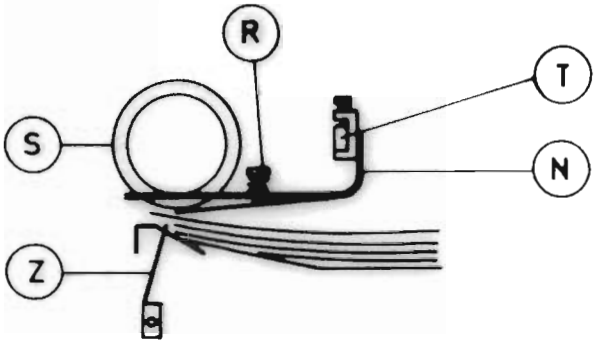

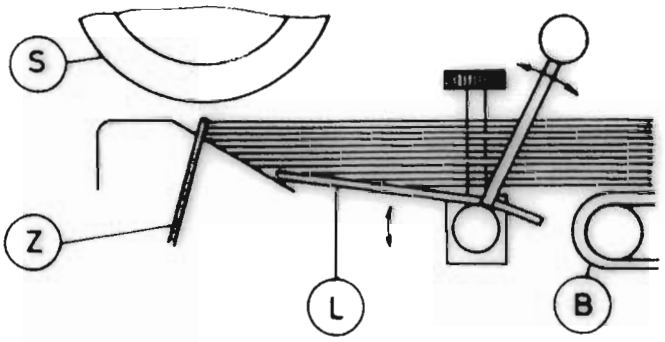

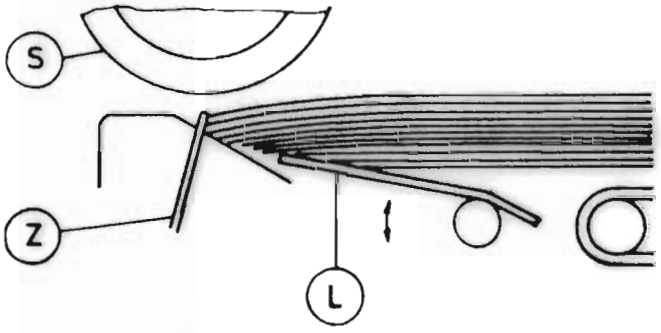

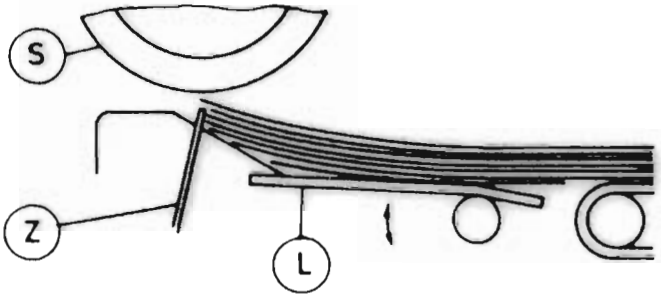

2.7) Sheet hold down

On up-curled sheets it is possible that they overrun tongue (Z) and transport stops to late, this creat a lot of doublessheets. with the adjustable hold-down (N) we can prevent this.

2.7.1) Position holddown (N) on left side of suction drum (S) on bar (T)

2.7.2) With knurled screw (R) adjust smooser tongue down till sheets are no more over riding tongue (Z)

2.8) Guide plate below sheets

To get best running conditions the bottom plate (L) between transport belt (B) and suctiondrum (S) is adjustable up or down

2.8.1) On down curled sheets adjust plate (L) up to a higher position

2.8.2) On up curled sheets adjust plate (L) down to a lower position

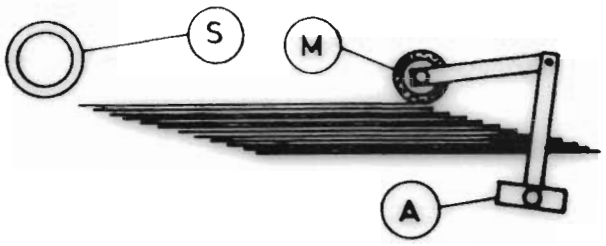

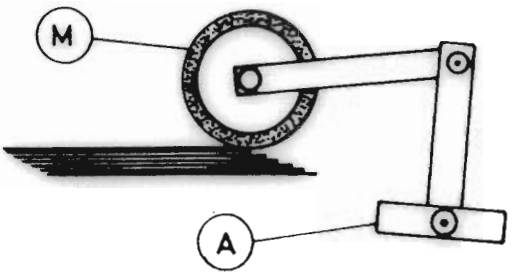

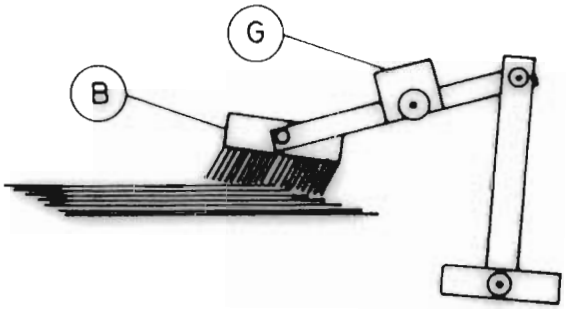

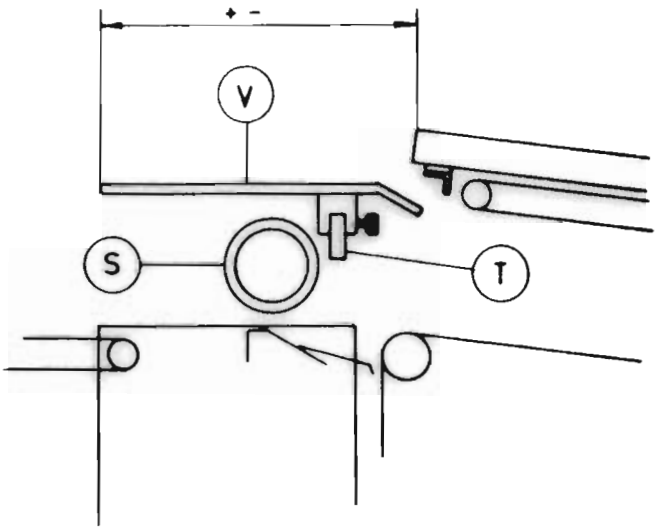

2.9) Tail drag

To control the tail end of sheets we use two soft wheels (M) and one brush (B)
adjust at (A)

2.9.1) Adjust wheels (M) on arm (A) to end of sheets, so that 3-5 sheets are hold

Between the two wheels (M) there is a brush (B) with a adjustable weight (G)

2.10) Loading capacity:

To increase the loading-capacity on top board, there are extension elements (V) available
They can be mounted on cross bar (T) near suction drum.

(important on large size sheets).

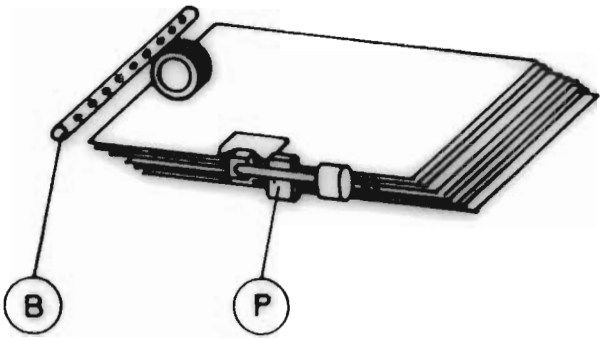

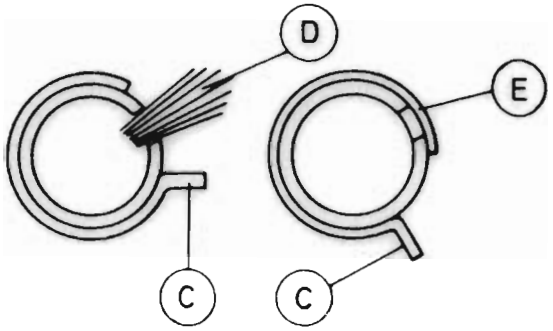

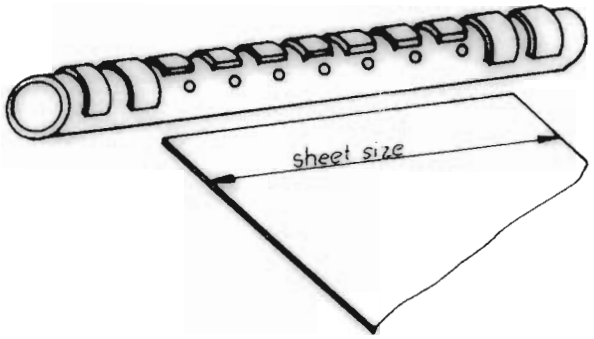

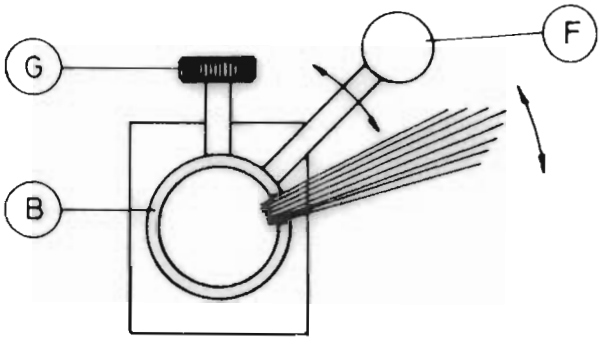

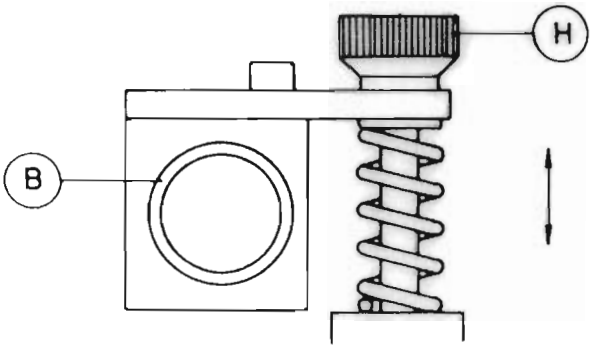

3) Air blast and sheet separation

Lifting and separation of sheets is performed from two sides.
Between suction drum and alignment table is a airtube (B) across front of sheets.
On left side of feeder is a self adjusting air nozzle (P)

3.1) On airtube (B) are many holes across enire width of feeder. This holes can be opend or closed with clips (C) picture (D) open (E) closed

3.1.1) Open all holes a'ong the size of sheet

3.1.2) Holes outside of sheet size keep closed with clips (C)

3.1.3) Airtube (B) can be turned on lever (F) and fastend on screw (G)

3.1.4) Airtube (B) is adjustable up or down on knurled screw (H)

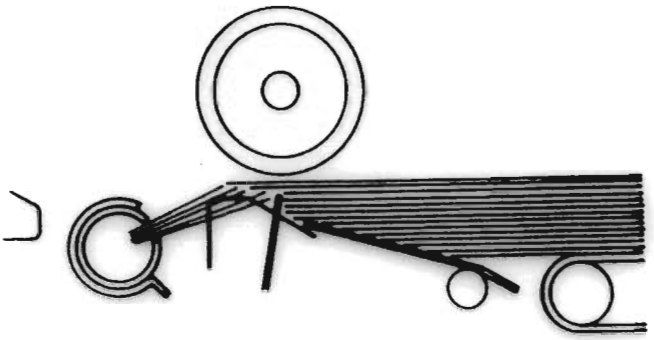

3.1.5) Most efficiency in sheet separation is available if air reaches sheets in a flat angle

3.1.6) On down curled sheets move airtube (B) down on screw (H) and turn air-blast direction up on lever (F)

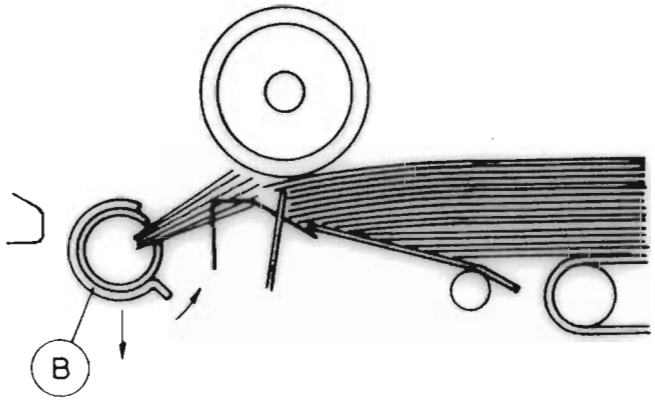

3.1.7) On up curled sheets more airtube (B) on screw (H) up and turn airblast direction down on lever (F)

3.1.8) If airtube is too fare turned up, a lot of air escape over sheet to atmosphere (bad separation, double sheets)

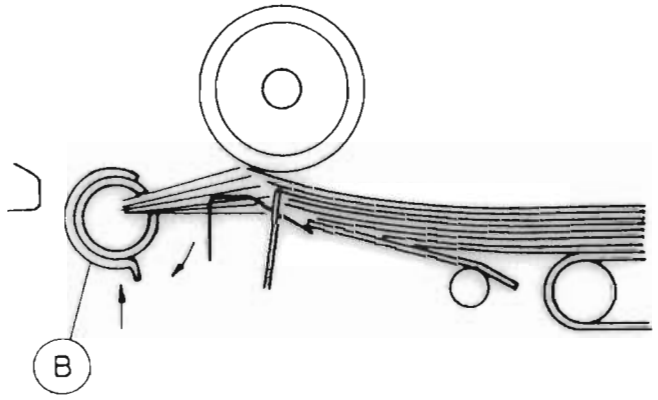

3.1.9) The best result we only get, if the rippled air guide plates (L) are used. The air get along the plate to sheets and provid best separation keep plate (L) over air-hole.

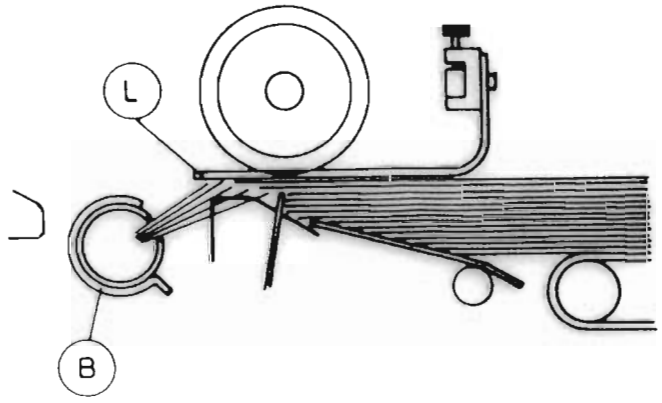

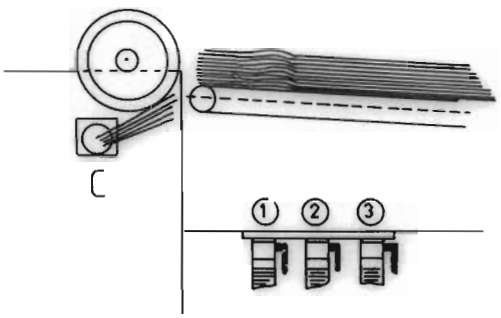

3.2 The airblast from air tube (C) is to be regulated throught the regulating chokes (1) and (2). In order to achieve a proper sheet separation a well ventilated packege of approximenely 15 sheets is required.

3.2.1 Regulating choke (3) is to regulate the airblast for side blower.

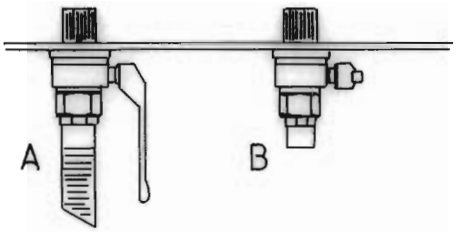

3.2.2 Position (A) maximum airblast . Position (B) closed - no airblast.

If handling small size sheets the top sheets are blowing back beneath the suction drum - to avoid this you can close more the regulation chokes (1) and (2) and close completely choke (3) for side blower.

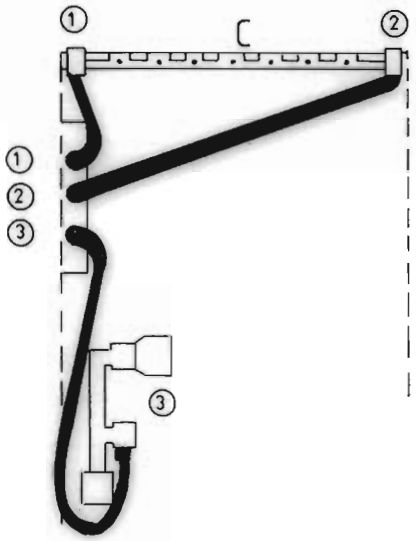

3.3 Side blower. The self adjustment air nozzle (P) which is on left hand side of feeder depends on sheet size, this air nozzle can be moved back or forwards. This blower should lift the rear half of sheets.

3.3.1 Adjust counter weight (G) to keep balance of blower. Blower should tuch slightly the top of sheets.

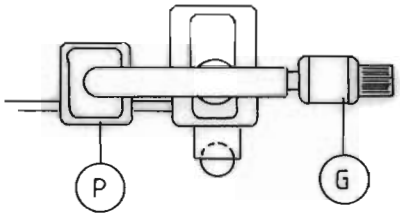

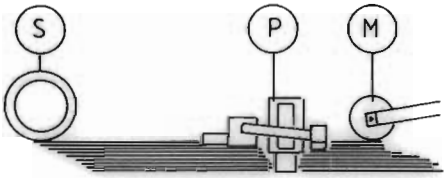

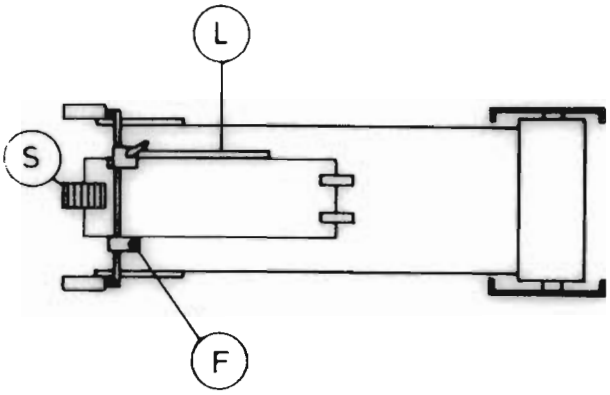

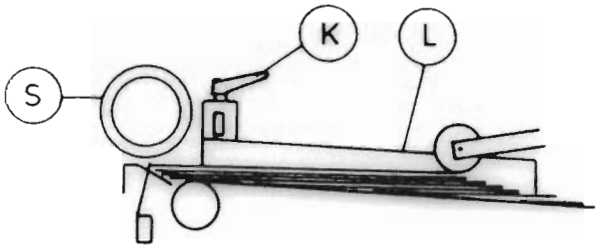

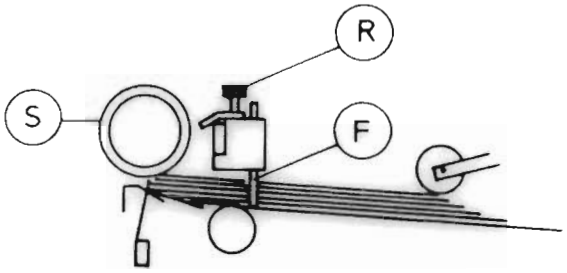

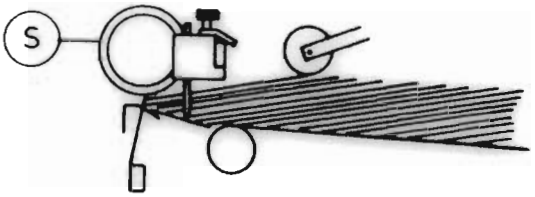

4) Sheet guids

In final position there are two guids to hold sheet in position.

4.1) On right hand side is a guide (L)

4.1.1) Put side guide (L) on to sheets on right hand side and tighten with setscrew (K)

4.2.1) Set guid pin (F) approx 2-3 mm (1/8") away of left hand side of sheets Tighten on setscrew (R)

4.2.2) If handling short sheets move guide pin (F) to left side of bar.

HOW TO ASSEMBLE THE NEW B123 (or T 60) CONTINUOUS FEEDER

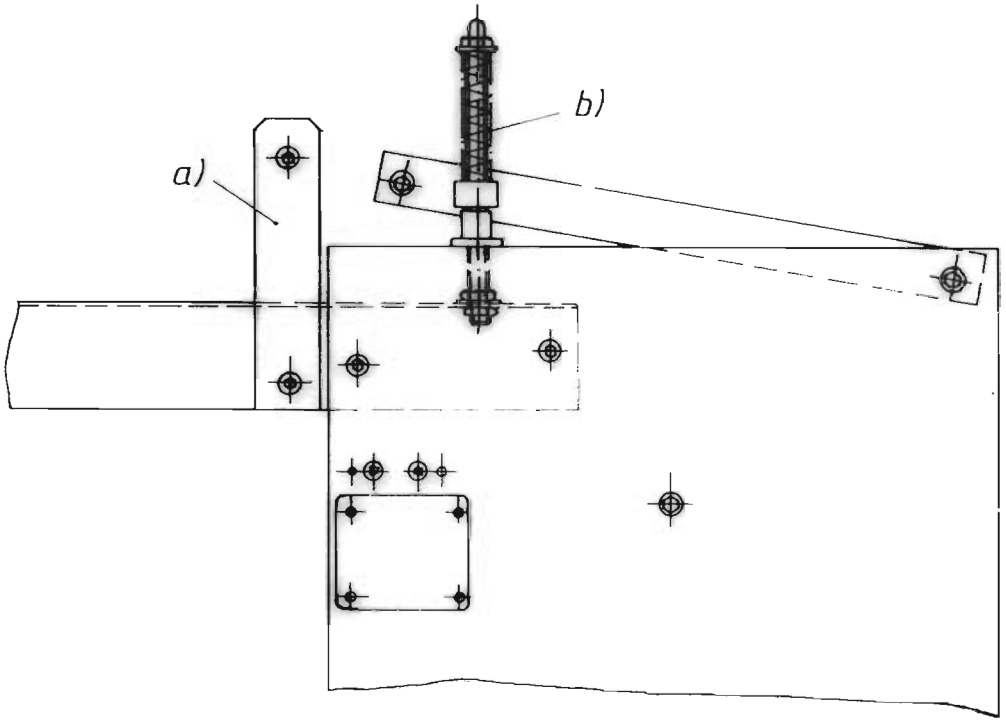

For space saving reasons the feeders are shipped with side plate (a) and adjusting screw (b) disassembled.

When installing the feeder, be sure to assemble the parts according to the sketch provided.

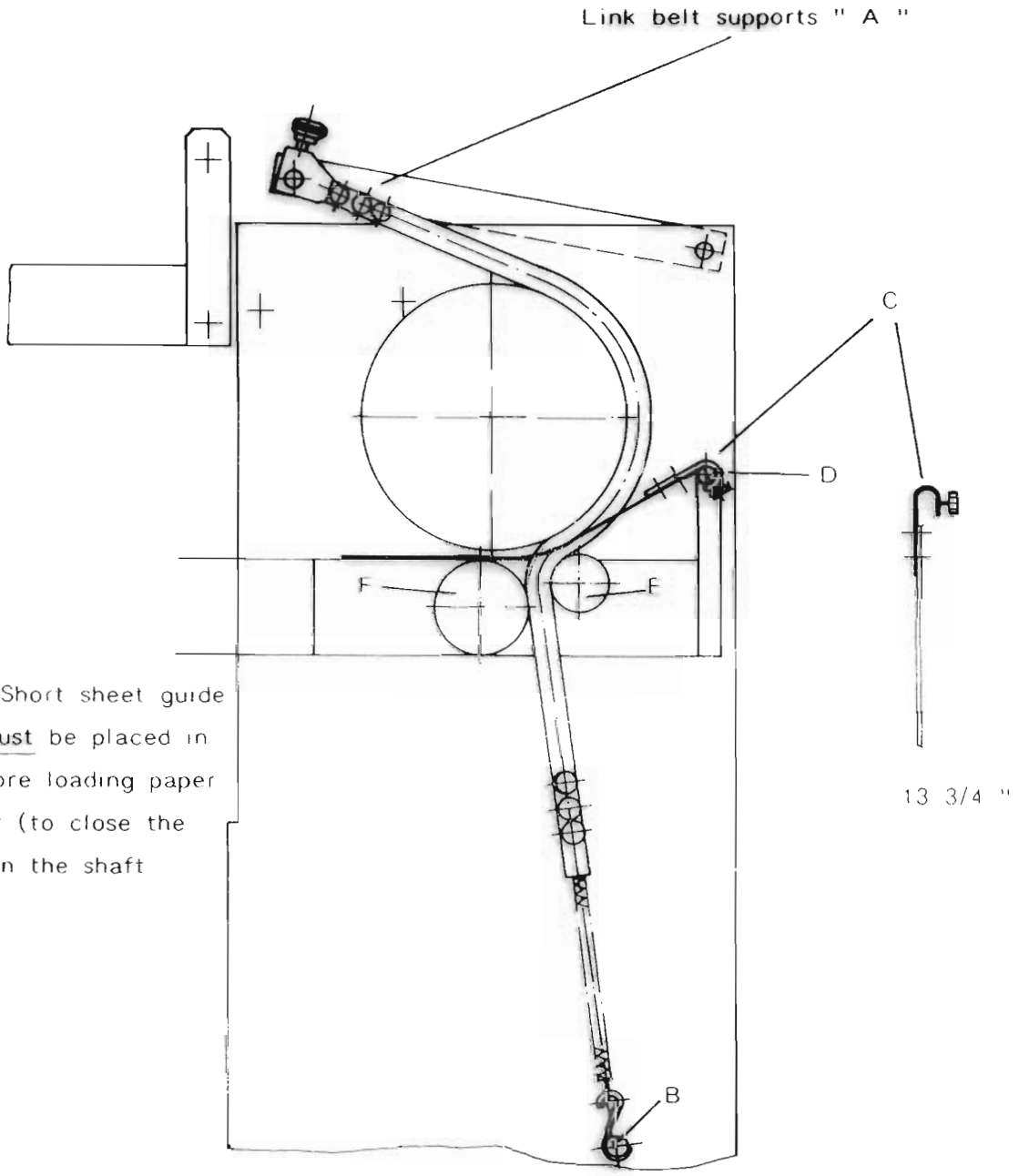

importnat: Short sheet guide straps C must be placed in Pos. D before loading paper onto feeder (to close the gap between the shaft E + F)

Very important: Before you start loading the feeder place the link belt A supports in a uniform distance for sheet size.

Note: Spring of link belt supports A should be connected to bottom cross bar B.

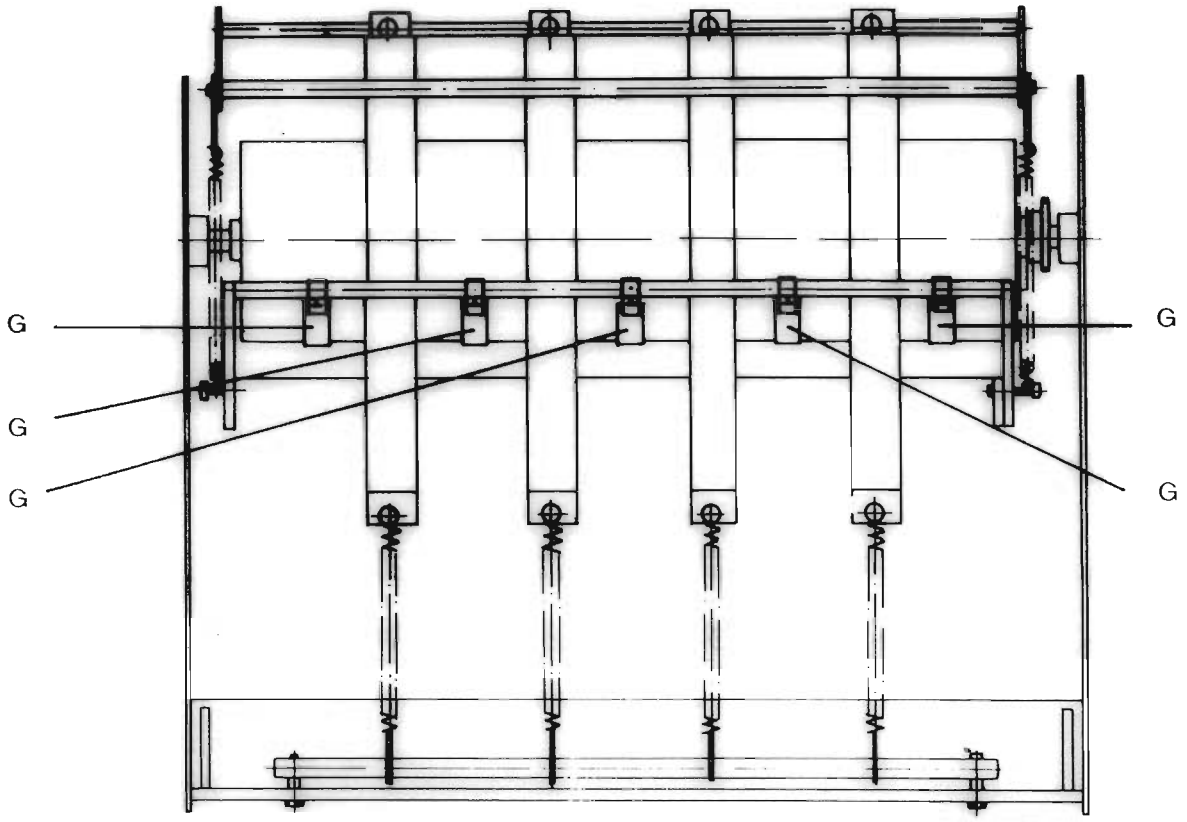

Important: The short sheet guide straps C must be placed in Pos. G before loading paper onto the feeder.

The two outer straps should always be placed at least 1/2 " from the edge of the sheet.

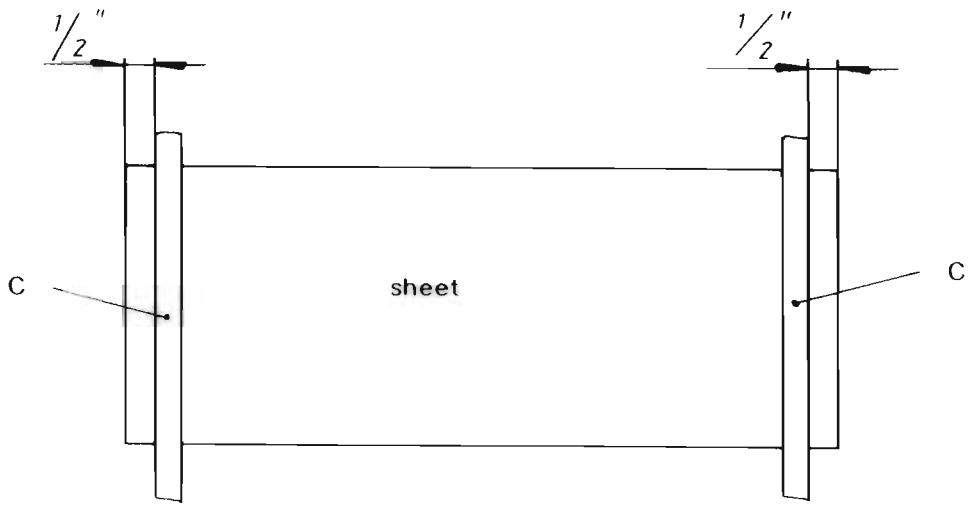

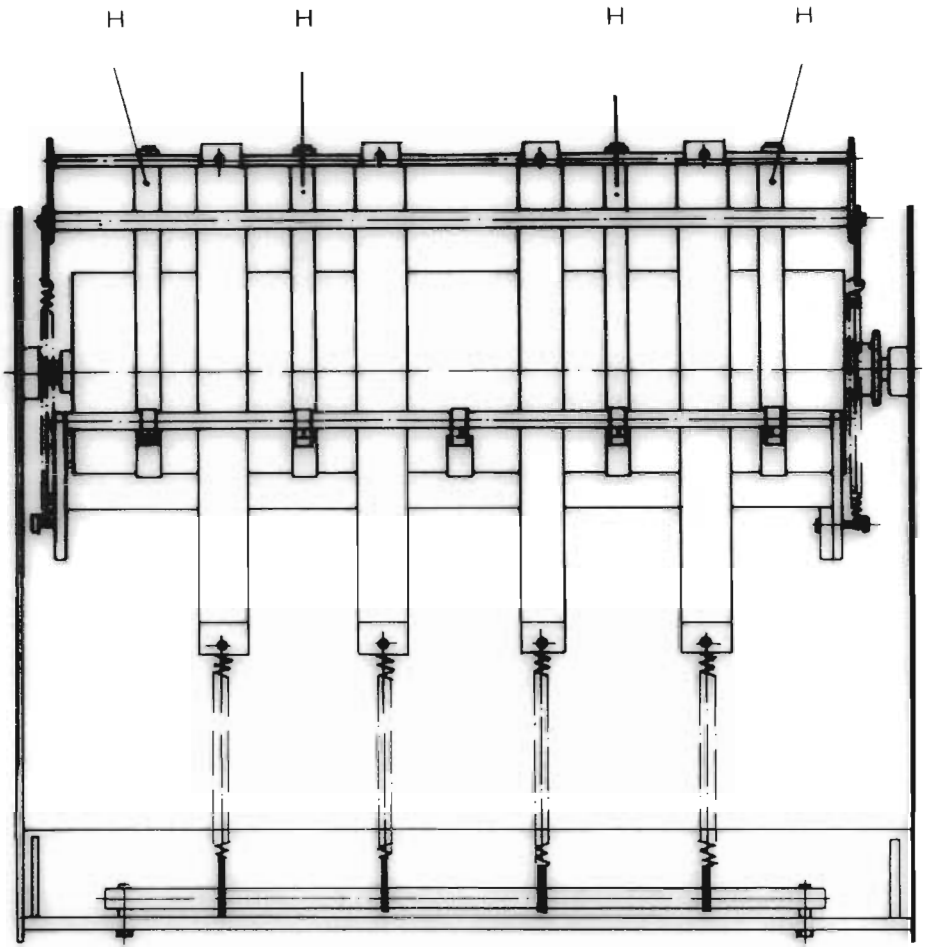

1. On extremely curled sheets the long plastic straps H are needed in position approximately 1/2 " from the edge of sheet.
2. Always place the required plastic straps H in a uniform distance across the sheet.
3. If normal paper is processed, these long plastic straps H are not required.

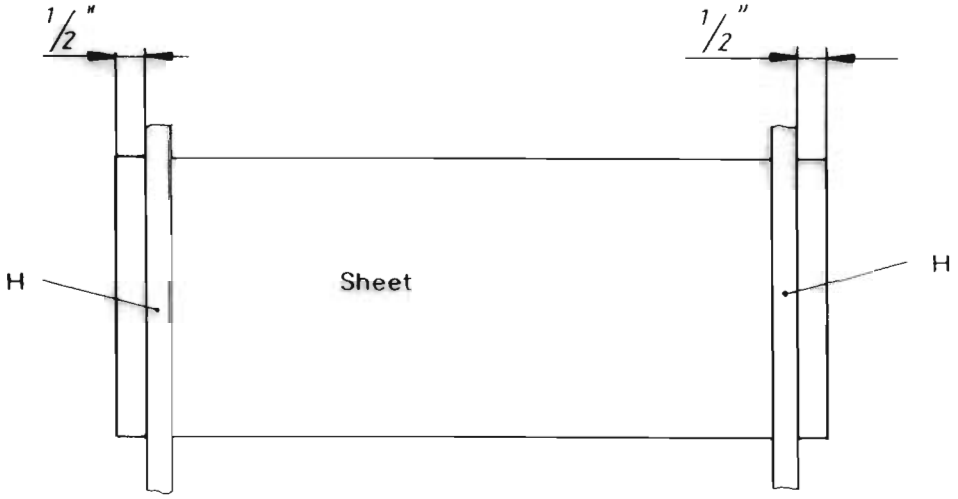

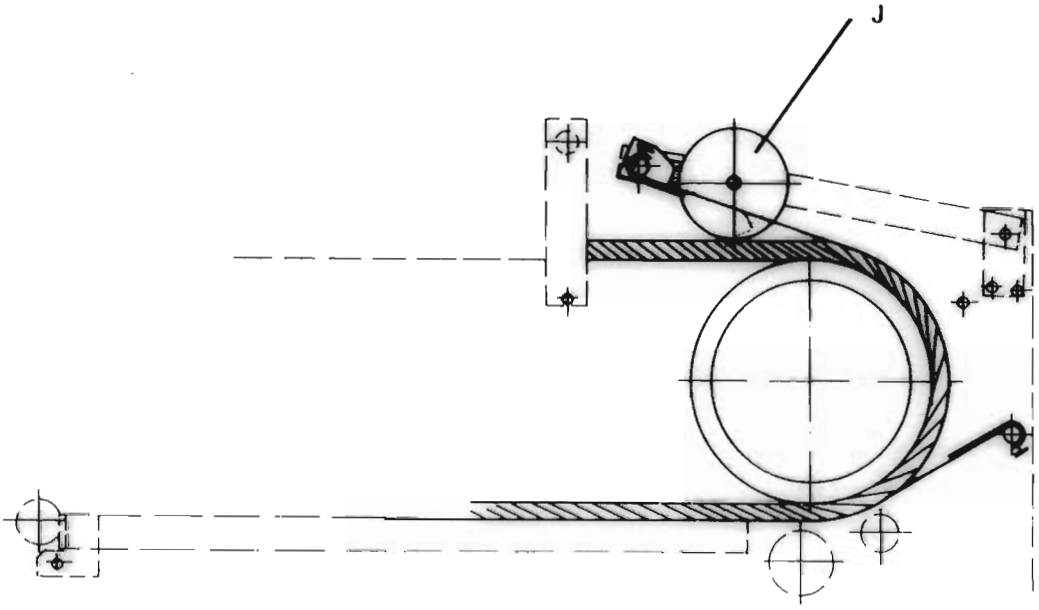

The two guiding wheels J should be used only, if extremely short sheets are processed.

The Caliper

The caliper-type double sheet deflector is located on the register table guide. A lever is provided on the side of the caliper, which is used for inserting a single piece of paper of the stock to be run between the avils.

To check the caliper for proper setting, start the folder, take a strip of the same material and insert it between the segment and the lower roller. The sheet feed mechanism should not stop. If two pieces of paper are inserted between the segment and the lower roller, sheet feed mechanism should stop. If an adjustment is required a knurled locking nut and screw are provided to raise or lower the top segment wheel to create the sensitivity required.

Register Table

As the sheet leaves the feeder, it enters upon a single blet of the register table the blet advancing the sheet to the parallel folding section and at the accurate register. The side guide can be positioned by loosening the two platic knobs located on guide block of machine. Slide the side guide to correspond with the scale located on the shaft on wich the guide laides. Graduations on the scale represent half width of the sheet. This size hould correspond with the setting of the loading side on the feeder. A micrometer adjustment is provided for the side guide. It is located at the right of the main guide. The ball rails can be equipped with plastic and/or metal balls to keep the sheet to the guide. The first five holes form the vacuum wheel should always be filled with the metal balls to exert sufficient pressure on the sheet to accelerate the sheet to intended speed. Plastic balls are used after the first five metal balls when the paper is light weight. For medium up to heavy weight. For medium up to heavy weight use as many steel balls as necessary.

In order to insure accurate folding, accoring, perforating and slitting, in the parallel section it is imperative that the sheets be fed squarly from the register table into the nº 1 and nº 2 folding rollers of theparallel section. A single adjustment is provided in center of register table side guide. When sheet is not square to the fold rollers and the plastic knob is loosened, the collar can be moved to compensat the setting.

Parallel Folding Station

The sheet is advanced from the register table to the parallel folding section where, by means of the fold plates, deflectors and fold rollers the sheet receives one, two, three or four parallel folds. Graduated scales are provided on all fold plates for setting fold plate-sheet stops according to fold size requirements. All fold plates are equipped with swinging deflectors for ease in positioning the deflector. Since all folding sections are similar, including slitter shaft adjustments, only the parallel section will be referred to.

Fold Plates

The nº 1, and nº 2 fold plate has a depth of . All other plates have a depth of , the minimum size fold each plate can produce is

How to determine fold plates to be used

Fold by hand a sheet of the job to be run, making the necessary fold as per the imposition requirements for that signature. Then check the folios and determine the gripper and register edges of the sheet Select the fold plate or plates to be used to make the required fold or folds, in folding section being made ready, as determined by requirements to the hand-folded signate.

How to position fold plate deflectors

After determining the fold plates to be used for the particular job to be run, position the deflectors. Lower the deflectors on those fold plates not to be used and raise the deflectors on those fold plates that are to be used. This is done in the following manner:

To position fold plate deflector, loosen the lock handle located on the operator's side of each section. One handle is used for each plate. Slide the plate away form the fold rollers and swing the deflector into the position required.

How to make preliminary fold plate sheet stop settings

The fold plate sheet stops are adjustable to accomodate the various

sizes of folds within the range of each fold plate. The preliminary setting is made by means of a graduates scale and pointer.

Different Settings

This section is prepared for the convenience of the folder operator. No attempt has been made to show all of the impositions that come within the range of the T 65 and T 75 MBO folder. Many impositions, in addition to those shown here, may be made if the occasion demands. Fold plates to be used are desingated as no. 1, 2, 3 and 4 - 8 page section. The roller and slitter shaft calipers are located on each side frame and are numbered 1 through 6.

The caliper nº 1 operates the roller marked nº 2 on the drawing and nº 2 caliper operates nº 3 roller etc.

To set the rollers to the calipers, the following procedure is used:

a) Slide all fold plates away from the fold rollers.
b) Insert one piece of paper under each caliper on both ends of the rollers with the lever provided.
c) Using the same paper, insert strips about 2" wide between the stationary roller and roller nº 2 approximately 3" from each end.
d) Turn handweel in the direction paper normally travels, and at the same time "Feel" the drag on the paper.
e) The drag should belight, never so much that the paper breaks when holding it with one hand and turning the handwheel with the other
f) Turning the caliper clockwise loosens the roller drag, counter clockwise increases the drag.
g) When this procedure has been used on all rollers including the slitter shafts, the scales on the caliper to prevent it from turning and slidding the friction-held scale to zero.
h) When necessary, slight adjustments can be made to increase or decrease the pressure on the sheet, but you can always return to the original zero setting.

Illustrations no. 1 - Four pages parallel "upfold"

Caliper no. 1 - insert single paper thickness
Caliper no. 2 - 6 - two paper thicknesses
Nº 1 plate stop, set at half sheet lenght
Deflectors nº 2 - 4 in position

Four pages parallel "downfold"
Caliper no. 1 and 2 - insert single paper thicknesss
Caliper no. 3 - 6 - two paper thickness
No. 1 deflector in position
No. 2 plate stop, set to half sheet lenght,
No. 3 and 4 deflectors in position
(Two or more 4 - pages sections may be folded and cut apart on folder)

Illustrarions no. 2 - Double parallel fold - 8 pages
Caliper no. 1 - insert single paper thickness
Caliper no. 2 - two paper thicknessses
Caliper no. 3 - 6 - four paper thicknesses
No. 1 plate stp set at half sheet lenght
No. 2 plate stop set to one-quarter sheet lenght
No. 3 and 4 deflectors in position

Illustrations no. 3 a - Six pages parallel "letterfold"
Calipers No. 1 and 2 - insert single paper thickness
No. 1 plate stop, set to two-thirds sheet lenght
No. 2 plate stop, set to one-thirds sheet lenght
No. 3 and four deflectors in position

Note: Operator must use large sheet gap on register table when using this imposition (see sheet spacing)

Illustrations No. 3b - Six pages parallel "letterfold")
Calipers no. 1 - 3 - insert single paper thickness
Calipers no. 4 - 6 - insert three paper thicknesses
No. 1 fold plate stop, set to one-third sheet lenght
No. 3 fold plate stop, set to one-third sheet lenght
No. 2 - 4 deflectors in position

Illustrations no. 4b - Six pages parallel "accordion"
Calipers no. 1 and 2 - insert single paper thickness
Calipers no. 3 - 6 - insert three paper thicknesses
No. 1 and 2 plate stop, set to one-third sheet lenght
No. 3 and 4 deflectors in position

Illustrarions no. 5 - Eight page "accordion"
Caliper no. 1 - 3 - insert single paper thickness
Caliper no. 4 - 6 - insert four paper thicknesses

No. 1 and 3 plate stop, set to one-quarter of sheet lenght
No. 4 deflector in position

Illustrarions no. 6 - Ten pages "accordion"
Caliper no. 1 - 4 - insert single paper thickness
Caliper no. 5 and 6 - insert five paper thicknesses
No. 1 - 4 plate stop, set to one-fifth lenght

Illustrations no. 7 - Twelve papges "parallel"
Caliper no. 1 - insert single paper thickness
Caliper no. 2 - 4 - insert two paper thicknesses
Caliper no. 5 and 6 - insert six paper thicknesses
No. 1 fold plate stop, set to half sheet lenght
No. 2 and 4 plate stop, set to one-sixth sheet lenght
No. 3fold plate deflector in position

Illustrations no. 8 - Eight pages right angle "upfold"
Set parallel section to be set as follows:
Caliper no. 1 - insert two paper thicknesses
Caliper no. 2 - 6 - insert four paper thicknesses
No. 1 plate stop, set to one-half of sheet width
Deflectors no. 2 - 4 are used

If a "downfold" is required in the 8-page section, set as follows:
Caliper no. 1 and 2 - insert two paper thicknesses
Caliper no. 3 - 6 - insert four paper thicknesses
No. 1 plate deflector in position
No. 2 plate stop, set to one-halt of sheet width
No. 3 and 4 deflectors in position

Illustrations no. 9 - Sixteen pages (oblong)
Set parallel section as descrebed in illustration no. 2
8 - page section to be set as follows:
Caliper no. 1 - insert four paper thicknesses
Caliper no. 2 - 6 - insert eight paper thicknesses
No. 1 plate stop, set to one-half of sheet width
No. 2 - 4 plate deflectors in position

Illustrations no. 10 - Twelve page right angle
Set parallel section as described in illustration no. 3b
8 - page section to be set as follows:

Caliper no. 1 - insert four paper thicknesses
Caliper no. 2 - 6 - insert eight paper thicknesses
No. 1 plate stop, set to one-half of sheet width
No. 2 - 4 plate deflectors in position

Illustrations no. 11 - Twelve pages accordion and right angle
Set parallel section as described in illustration no. 4
8 - page section to be set as follows:
Caliper no. 1 - insert three paper thicknesses
Calipers no. 2 - 6 - insert six paper thicknesses
No. 1 plate stop, set to one-half of sheet width
No. 2 - 4 plate deflectors in position

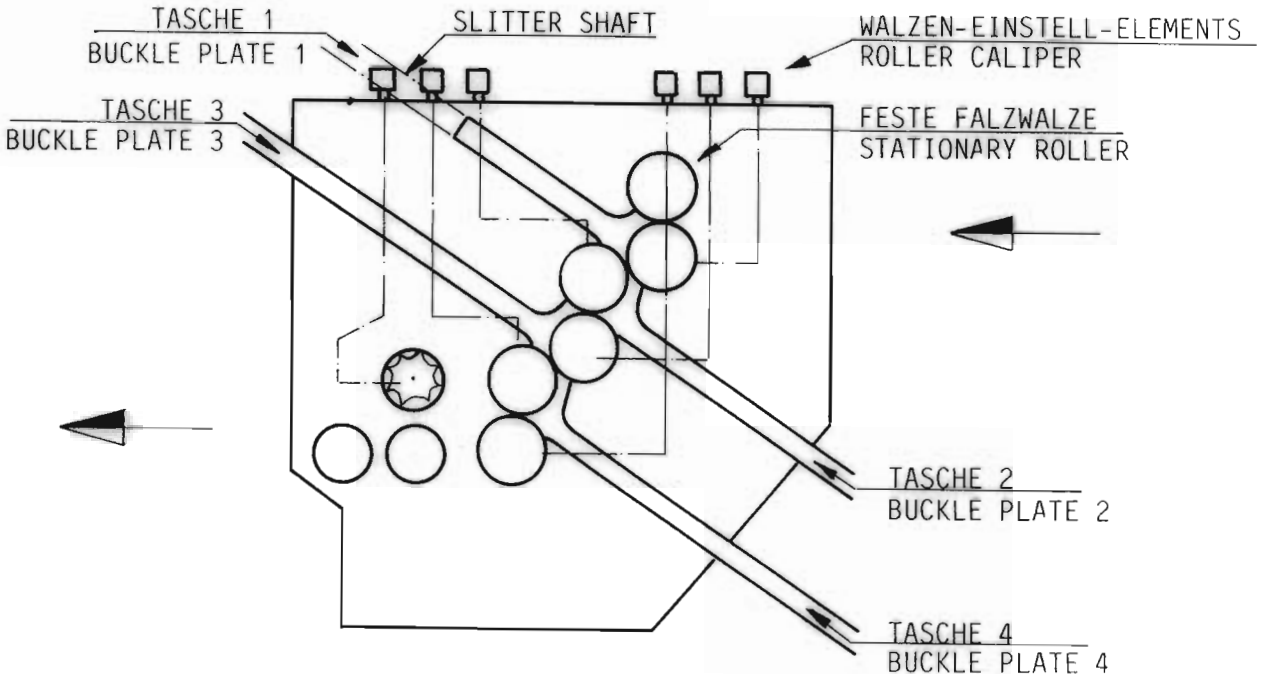

Nr. 1

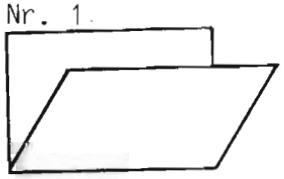

4 Seiten
Parallelbruch

4 Pages
Parallel

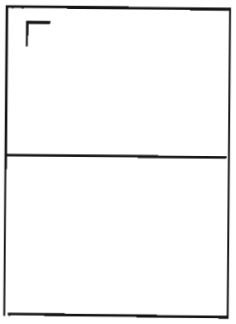

Nr. 4

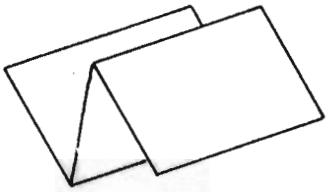

6 Seiten Zickzack

6 Pages Accordion

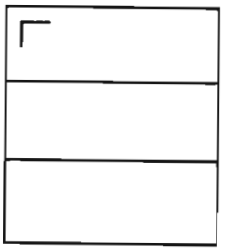

Nr. 2

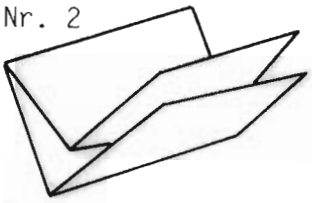

Doppel-Parallelfalz

Double Parallelfold
8 pages

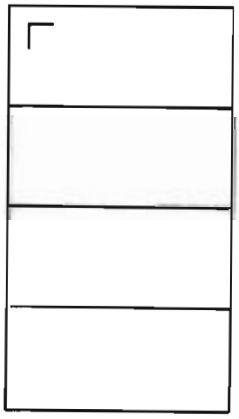

Nr. 5

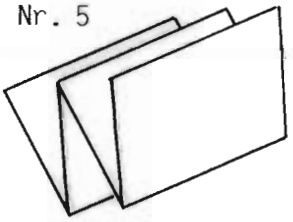

8 Seiten Zickzack

8 Pages Accordion

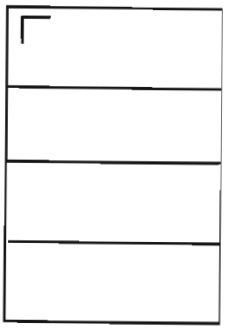

Nr. 3

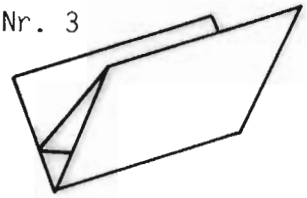

6 Seiten Wickelfalz

6 Pages Parallel

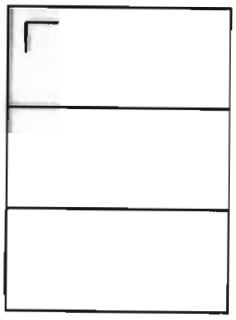

Nr. 6

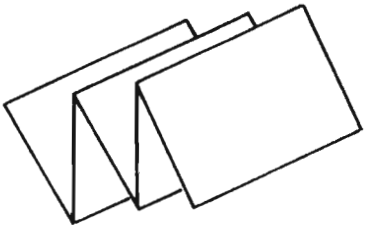

10 Seiten Zickzack

10 Pages Accordion

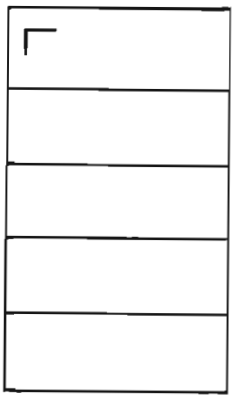

Nr. 7

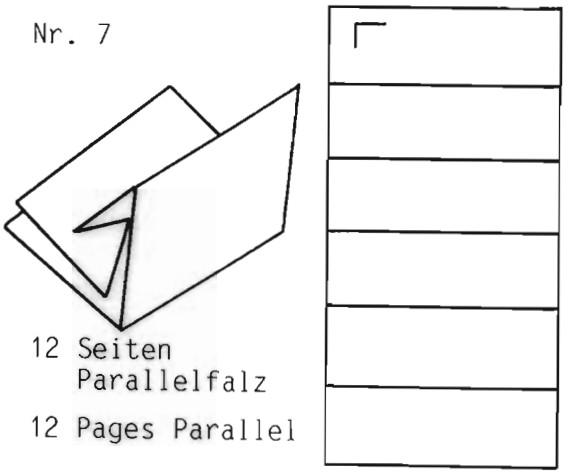

12 Seiten
Parallelfalz

12 Pages Parallel

Nr. 10

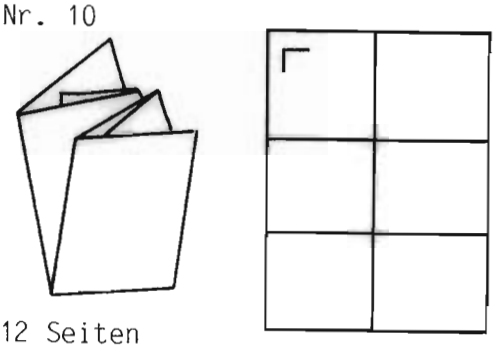

12 Seiten
Kreuzbruch

12 Pages Right Angle

Nr. 8

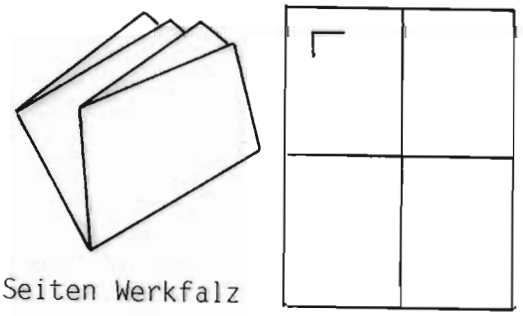

8 Seiten Werkfalz

8 Pages Right Angle

Nr. 11

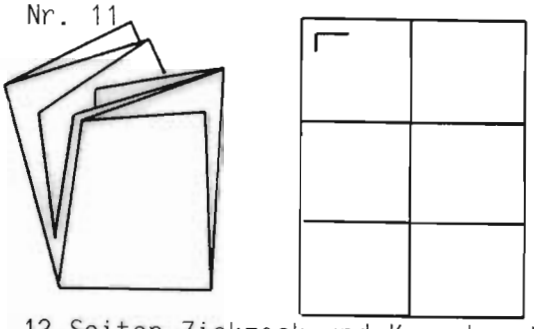

12 Seiten Zickzack und Kreuzbruch

12 Pages Accordion and right Angle

Nr 9

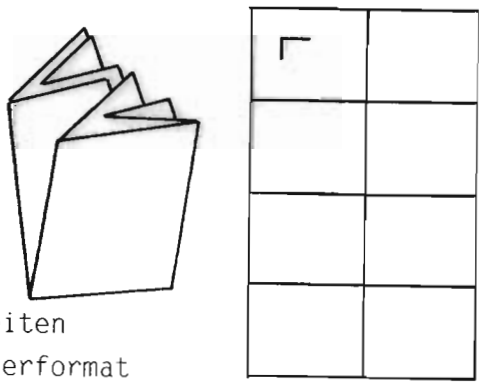

16 Seiten
Querformat

16 Pages Oblong

How to remove and replace slitter shafts

The perforators, scorers, slitter, edge trimmers, and rubber rollers are mounted on the slitter shafts. These shafts are constructed or easy removal from the folding sections when a change in set-up is required.

To remove the slitter shafts, loosen the Allen type cap screw in the brass housing which holds the polished knobs. Pull the polished knobs. Pull the polished knob with one hand while supporting the slitter shaft with your other hand. Move the slitter shaft in the same direction approximately inch to remove shafts from the folding section.

To install, reverse the above procedure, making sure that the pin fits into the lot and all end play is removed by pushing the polished knobs in. Then tighten the Allen type cap screw.

How to install and adjsut scorers

The scorer blade fits on a holder and is secured to the holder by means of a tightening collar with holes. A spanner wrench is provides for removing or tightening the collar.

When installing scores for a right angle fold, using an "up" fold plate, put scorer blade assemby on the upper slitter shaft with the locking collar facing to the drive side of the machine; If a fold is to be made in a "down" fold plate, the scorer assemby should be installed on the lower shaft with the locking collar facing to the right towared the operator's side of the machine. Facing the scorer assembly on the shafts as directed above will prevent the locking collar from loosening itself during operation.

A radius is provided on each side of the steel collars. These collars have to be positioned on both sides of the blade. The depth of the score can be varied by increasing or descreasing the gap between the collar and the blade.

How to install perforators

The perforator blades are mounted on the slitter shaft by means of the same holders and locking collars that are used for the acorer blades (refer to paragraph "How to install and adjust scorers). The plate has a flat side and must be assembled to the holder with the sharpened side facing the locking collar (see Instruction sheet E1). The perforator blade assembly should be installed on the upper shaft with the locking collar facing the drive side of the section.

The lower knife is a hardened steel collar that has two sharp edges. One of the sharp edges should be positioned against the flat side of the perforator blade. Do not force together, just allow them to contact each other.

When blade an lower knife are in position, attach a stripper on the square bar located above the slitter shaft near the perforator

A 15 notch blade is used for heavy to medium weight paper
A 12 notch blade is used for light weight paper
There are more different blades available see TM 32

How to install slitters

A slitter blade is mounted on the upper slitter shaft by means of the same holder and locking collar that is used for the score blade (refer to paragraph "How to install and adjust scorers"). The slitter blade assembly should be installed with the locking collar facing the drive side of the section. The lower knife is a herdened steel collar that has sharp edges on both sides. It is the same steel collar that is used for perforating. One of the sharp edges hould be positioned against the flat side of the knife. Do not force them together, just allow them to contact each other. No stripper is required when slitting material.

How to install center bleed trim

To accomplish a center bleed trim, use the special knife holder with spacer washers. Assemble a knife, flat side against the holder, with the required amount of spacer waschers, and a second knife with the flat side facing the locking collar. The holder is large enough to

do 1/4" up to 1/2" of center bleed trimming. On the lower shaft two hardened steel collars are required. Position each lower knife to juste contact the flat side of the cutting knives. A center bleed trim "stripper" is fastened to the bar below the slitter shafts. The flat steel finger is placed between the lower knives to remove the portion being cut. The waste then falls to the floor.

Universal Stacker Delivery

The stacker supplied with the folder is easily attached at either the parallel or the 8-page folding sections to delivery work completed at eighter station.

When work is completed at anyone of the folding sections, the signatures are delivered onto the stacker delivery belt. Stacker rollers are attached to a shaft across the stacker and are adjustable for various sizes of signatures. The stacker rollers receive the folded edge of the signaure and hold it down on the stacker belts.

To prevent signatures from inserting, which may occur when stacking springy singature the stacker may be lowered in a different position. A variable speed motor controls the speed of the stacker belt. The speed is regulated by means of the control knob on the delivery control panel. By increasing or descreasing the stacker belt speed the operator can create the most desired "shingling" for proper stacking of the signatures.

The stacker is supplied with two (2) electric cords, one for the stacker motor and the other for the control of the complete folder. When using the stacker with the parallel section, the cord plug in the main panel. If the 8-page section is to be used, the cables must be plugged into the electric box of the 8-page section.

Summary

The quality and quantity of work that can be produced with an MBO folder is depent upon the care with which the operator makes the required settings and adjustments. Jam-ups or inaccurate folding, which are not due to stock conditions or mechanical failure, can usually by traced to inaccurate settings or adjustments. In the event that trouble of this nature may occur, the operator should check to

make sure, that all settings and adjustments have been made in accordance with the instruction in this book.

Caution

In the event of mechanical failure, any corrective work must be performed by or under the supervision of someone thoroughly familiar with the mechanical operation of the machine. Failure to comply with this caution may result in damage to the machine. In order to avoid personal injury, do not work on the machine while it is in motion, do not attempt to work over machine with wrenches or screw drivers while machine is in motion.

How to position scorers, perforators, slitters and rubber rollers

Equally space rubber collars on the top shaft and steel collars equally placed on lower shaft on either side of the knife or counter knife. The rubber roller section to advance the sheet from the fold rollers, support the sheet being slit, perforator scored and convey the sheet to the cross carrier or the stacker delivery.

How to position cross carrier side lay

The cross carrier side guide is adjustable to accomodat the various sizes of signatures folded in the preceding section. Use a signature folded by the parallel section and place the signature on the cross carrier diagonal rollers and insert against the guide edge. Loosen the large plastic knob that retains the adjustable guide. Move the guide in or out as required, until the edge of the sheet oppositen the guide edge is approximately inch inside or side frame.

Install the spring steel guides uniformly across the width of the signature so that the sheet will be guided into the side guide.

Install the aluminum guide bars across the width of the signature so that the signature will be guided into the fold rollers of the 8-pages section.

The plastic and metal balls supplied with the cross carried side guide serve the same purpose as those on the register table. The number of balls to be used and theri distribution along the cross

carrier side guide is dependent upon the weight, size and type of material being run.

In order to assure accurate folding in the 8-page section, the cross carrier side guide can be adjusted by using the "skew" adjustment located on top of the side guide. The small plastic knob serves as a lock and the knurled collar is an accentricity to assist sheets coming from the parallel section into the cross carrier, a height adjustment can be made. The rear leg of the cross carrier has a single lock caster wheel used to maintain the position of the 8-page section. To raise or lower the cross carrier, loosen the locking the locking knib and lift or lower complete cross carrier and retighten the locking knob.

Do not attempt to work over machine with wrenches or screw drivers while machine is in motion.

Lubrication

The complete machine is equipped with sealed ball bearings.

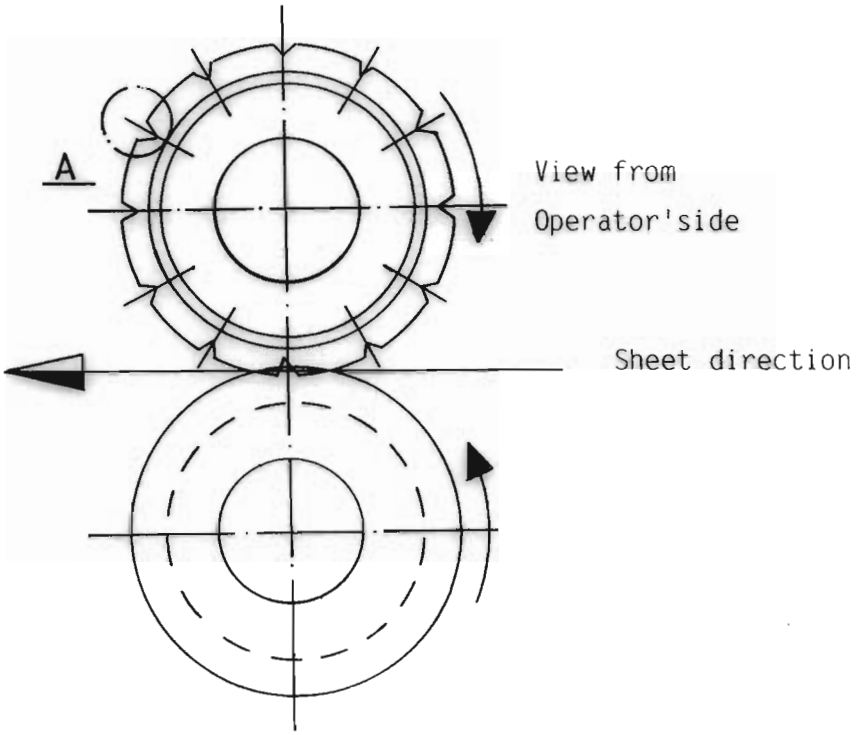

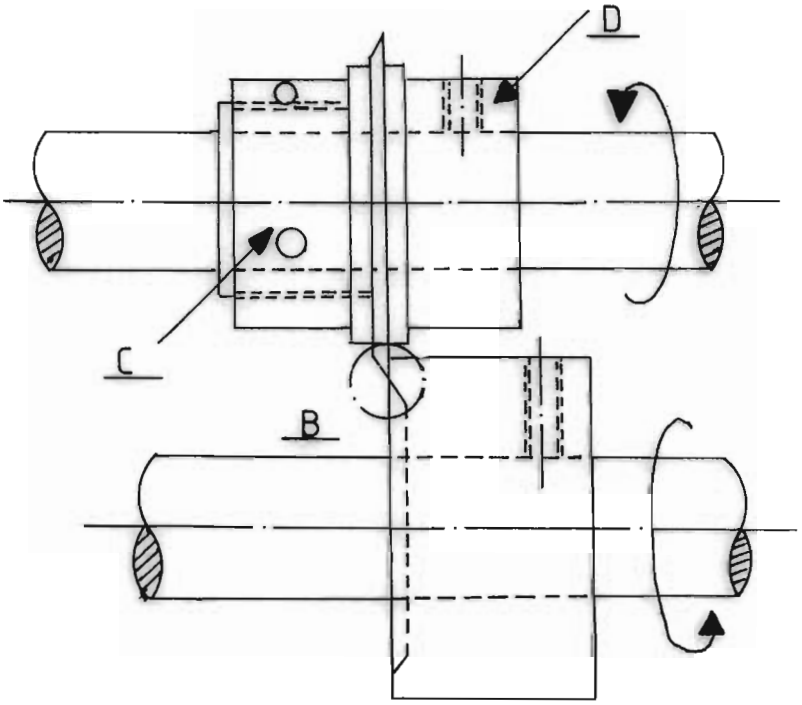

A = At installation make sure that the teeth of the perforating knife are positioned correctly!

B = The cutting edge of the perforating or cutting knife must sit close to the lower part of the cutting edge!

C = The nut of the knife holder D must always be screwed on contrary to the running direction of the knife shafts!