Folding unit

Translation of the original operating manual

Z 2

Z 6

Keep for future reference!

Type of machine:	Folding unit		
Configuration:	Z 2, Z 6		
Type of document:	Translation of the original operating manual		
Version:	V1.8	**Author:**	Wolfgang Matzner
Status as of:	06/21/2016	**Machine no.:**	
Language:	English	**File name:**	BA_Z2-6_MC_NC_VC_M1_V1.8_en
Manufacturer:	MBO Maschinenbau Oppenweiler Binder GmbH & Co. KG PO Box 1169 71567 Oppenweiler GERMANY Tel.: +49 7191 46 0 Fax: +49 7191 46 34 http://www.mbo-folder.com info@mbo-folder.com		

Subject to alterations!

Copyright This documentation is subject to copyright law. The claimed copyright includes all forms and types of copyright-protected materials and information that are currently permitted. No part of the documentation may be copied, otherwise duplicated, edited or translated into other languages, regardless of the manner in which or with which tools this takes place.

Electronically-stored information provided by the manufacturer (CD-ROM, Internet) may be printed out by the user if the created print medium serves the purpose of use or service of the product described.

Name plate and CE marking:

For all questions relating to your machine, please contact your MBO agency.
You can find the address on our home page: www.mbo-folder.com.

For the identification of the machine and the most important machine data, see the name plate on the machine.

1	CE marking	4	Year of manufacture
2	Type of machine	5	Name plate
3	Commission number		

Illustration 1: Name plate

Always specify these details for inquiries, service and spare parts orders:

- Commission no.
- Type of machine

EC/EU Declaration of Conformity

according to EC Machine Directive 2006/42/EC, Annex II, No. 1 A.

The manufacturer

MBO Maschinenbau Oppenweiler Binder GmbH & Co. KG

Grabenstraße 4-6

71570 Oppenweiler

GERMANY

hereby declares that the machine described below:

Designation	Folding unit
Type	Z 2, Z 6
Commissioning no.	

complies with the provisions of the following EC/EU directives:

Machinery Directive	2006/42/EC
EMC Directive	2014/30/EU

Harmonized standards applied:

EN ISO 12100:2010

EN 1010-1:2004+A1:2010

EN 1010-4:2004+A1:2009

EN ISO 60204-1:2006

Authorized representative for compiling the technical file:

Name	Wolfgang Matzner
Address	Grabenstraße 4-6 71570 Oppenweiler GERMANY

Oppenweiler, 06/21/2016

_____

Frank Eckert- Managing Director

Table of contents

7 Set-up, commissioning

8 Adjustment and operation

1 About this manual

Everybody who will transport, set up, connect, adjust, operate, maintain, repair, and dismantle this machine must read this operating manual.

Safe use of the machine is only possible once everybody has understood the content of and follows all points of the operating manual. This applies especially to the chapter on safety.

This operating manual contains important notes on how to operate the machine safely, correctly, and economically.

Following these notices helps

- To avoid hazards.
- To minimize repair costs and downtimes.
- To increase the reliability and service life of the machine.

Supplementation

- The operator must add instructions regarding national regulations for accident prevention to this operating manual.

Retention

- This operating manual forms part of the machine. It must be available on the machine throughout the machine's entire service life.

If you sell the machine

- Give this operating manual to any subsequent owner or user of the machine.

We reserve the right to make technical changes to improve the machine, even if these changes are not taken into account in this operating manual.

1.1 Additional documents

In addition to this operating manual, there are these documents about the machine:

Designation	Type MBO part number	Use
Wiring diagram		
Spare parts list		
Knife catalog		
Supplier documentation		

Table 1: Additional documents

1.1.1 Supplier documentation

Manufacturer	Designation	Type MBO part number	Use

Table 2: Supplier documentation

1.2 Structure of the operating manual

The table lists the chapters of the operating manual. It also describes the essential content of these chapters as well as the target groups at whom the chapters are directed.

No.	Chapter	Contents	Target group
	Table of contents	The detailed table of contents serves as a search tool	• Owner/operator • Operating personnel • Maintenance personnel • Service technicians
1	About this manual	Important notes about this operating manual	• Owner/operator • Operating personnel • Maintenance personnel • Service technicians
2	Basic safety instructions	Details about: • Residual risks and hazards with intended use. • Foreseeable misuse. • Avoidance of the risks.	• Owner/operator • Operating personnel • Maintenance personnel • Service technicians
3	Product description	• Important notices about the product • Technical data	• Owner/operator • Operating personnel • Maintenance personnel
4	Structure and function	Description of: • Structure and function • Safety and protective devices	• Operating personnel • Maintenance personnel • Service technicians
5	Operating and display elements, operating modes	Description of the: • Operating and display elements • Operating modes	• Operating personnel • Maintenance personnel • Service technicians
6	Transport, interim storage	Details about: • Packaging • Transportation • Interim storage	• Transport personnel • Maintenance personnel • Service technicians
7	Set-up and commissioning	Details for: • Set-up • Commissioning	• Maintenance personnel • Service technicians
8	Adjustment and operation	Details for: • Operation • Adjustment	• Operating personnel • Maintenance personnel • Service technicians
9	Maintenance	Details for the: • Operational maintenance • Maintenance • Repair	• Operating personnel, • Maintenance personnel • Service technicians
10	Decommissioning, storage and putting the machine back into operation	Details for the: • Decommissioning • Storage • Recommissioning	• Owner/operator • Operating personnel • Maintenance personnel • Service technicians
11	Disposal	Details for the environmentally friendly disposal	• Owner/operator • Maintenance personnel • Service technicians

Table 3: Structure of the operating manual

1.3 Signs and symbols used

The signs and symbols in this manual should help you to use the manual and the machine quickly and safely.

Symbol	Explanation
▷	Indicates an instruction for action. The sequence is not specified.
1) ... 2) ... 3) ...	Numbered instructions for action. The defined sequence of the instructions for action makes it easier for you to use the machine correctly and safely.
✓	Here you will find the result of a sequence of instructions for action.
<STOP>	Push button with the label between the brackets (e.g. Stop).
	Additional information for use of the machine.
	Important notice, please observe.

Table 4: Symbols, terms, and abbreviations

1.4 Description of safety messages

Safety messages are marked by a safety sign and a signal word.

1.4.1 Signal words

The signal words draw your attention to the severity of the hazard. They are structured according to a classification system.

Signal word	Meaning
DANGER	Signal word to indicate a hazardous situation with high risk level which, if not avoided, will result in death or serious injury.
WARNING	Signal word to indicate a possible hazardous situation with medium risk level which, if not avoided, could result in death or serious injury.
CAUTION	Signal word to indicate a possible hazardous situation with minor risk level which, if not avoided, could result in minor or moderate injury or property damage.

Table 5: Signal word meanings

1.4.2 Structure of safety messages

Each safety message is structured as follows:

- Safety sign
- Signal word to identify the hazard level
- Type and source of the hazard
- Possible consequences of the hazard
- Measure(s) for avoiding the hazard

Example:

DANGER! WARNING! CAUTION! (Signal word)
Type and source of the hazard.
Possible consequences of the hazard.
Measure(s) for avoiding the hazard

1.4.3 Safety sign

Depiction	Meaning
	**Prohibition sign** Red border, white background, black symbol. Safety symbol that forbids a behavior that could cause a hazard.
	**Warning sign** Yellow background, black symbol. Safety sign that warns about a hazard.
	**Mandatory sign** Blue background, white symbol. Safety sign that prescribes a particular behavior.
	**Rescue sign** Green background, white symbol. Safety sign that identifies the rescue path or the path to a place where you can get help or find rescue equipment in case of an emergency.
	**Fire protection sign** Red background, white symbol. Safety sign, which in case of hazard marks the location of fire alarm and fire extinguishing equipment and/or the path to this equipment.

Table 6: Safety sign

1.4.3.1 Warning sign

Depiction	Meaning
	**Warning about a general hazard.** You will see this warning-triangle next to activities during which several causes can create hazards.
	**Warning of hazardous voltage.** You will see this warning-triangle next to activities during which there is a hazard of electrical shock, possibly with deadly consequences.
	**Warning of rotating rollers.** You will see this warning triangle next to activities during which there is a hazard of crushing, possibly with deadly consequences.
	**Warning of crushing of hand.** You will see this warning-triangle next to activities during which there is a hazard of crushing the hand.
	**Warning of rotating machine parts.** You will see this warning-triangle next to activities during which there is a hazard of cutting injuries, possibly with deadly consequences.
	**Warning of lifting heavy machine parts.** You will see this warning triangle next to activities during which there is a hazard of overloading due to lifting heavy loads.
	**Warning of tipping machine parts.** You will see this warning-triangle next to activities during which there is a hazard of crushing due to tipping loads.
	**Warning of entanglement zone.** You will see this warning-triangle next to activities during which there is a entanglement hazard.
	**Warning of sharp knives.** You will see this warning-triangle next to activities during which there is a hazard of cutting injuries, possibly with deadly consequences.

Table 7: Warning sign

Depiction	Meaning
	**Warning of substances harmful to health.** You will see this warning-triangle next to activities during which there is a hazard of substances harmful to health, possibly with deadly consequences.
	**Warning of oxidizing substances.** You will see this warning-triangle next to activities during which there is a hazard of oxidizing substances, possibly with deadly consequences.
	**Warning of hot surfaces.** You will see this warning-triangle next to activities during which there is a hazard of burns, possibly with long-term consequences.
	**Warning of tripping points.** You will see this warning-triangle next to activities during which there is a tripping hazard, possibly with deadly consequences.

Table 7: Warning sign

1.4.3.2 Mandatory sign

Depiction	Meaning
	**Use hand protection.** You will see this mandatory sign next to activities for which safety gloves should be worn.
	**Use foot protection.** You will see this mandatory sign next to activities for which safety shoes should be worn.
	**Use ear protection.** You will see this mandatory sign next to activities for which ear protection should be worn.
	**Use eye protection.** You will see this mandatory sign next to activities for which eye protection should be worn.
	**Get help.** You will see this mandatory sign next to activities for which you should ask for the help of other people.
	**Follow the operating manual.** You will see this mandatory sign next to activities for which you should follow the operating manual.
	**Heed the maintenance chapter.** You will see this mandatory sign next to activities for which you should heed the maintenance chapter.
	**Activate before maintenance or repair.** You will see this mandatory sign next to activities for which the machine must be de-energized.

Table 8: Mandatory sign

1.4.3.3 Marking of danger spots

Permanent hazards and danger spots are marked with yellow and black stripes.

Depiction	Meaning
	**Heed danger spot or hindrance.** This marking is affixed to constant danger spots and hindrances.

Table 9: Marking of danger spots

1.5 User assessment of the operating manual

Our operating manuals are updated regularly.
Help us with your suggestions for improvement; they make the manuals user-friendly.

2 Basic safety instructions

The basic requirement for the safe handling and fault-free operation of this machine is knowledge of the basic safety instructions and the safety regulations.

- The operating manual must be heeded by all people who work on or at the machine.
- Read and understand the operating manual before working with the machine.
- Always keep the operating manual where the machine is being used.
- The operating manual must always be freely available to the operating and maintenance personnel.
- Also heed the applicable accident prevention and environmental protection rules and regulations for the place where the machine is used.

2.1 Intended use

- The machine is intended exclusively for the processing of broadsheets.

  The specifications relative to format and grammage in the "Technical data" chapter must be complied with.
- The machine is intended exclusively for one-man operation.
- The machine is intended exclusively for operation in a flawless technical state.
  Any failures that may endanger safety must be remedied immediately by trained maintenance personnel, or a specialist from the manufacturer or supplier.
- The machine may only be operated by specially-trained and instructed personnel.
- The machine may only be operated with the required personal protective equipment.
- Troubleshooting, maintenance and service must be carried out by trained maintenance personnel only.
- Follow all instructions in this operating manual.
- Heed the local safety and accident prevention regulations.
- Adhere to the inspection and maintenance intervals.
- Use only original wearing parts and spare parts.

Use the machine only as intended and when the protective device is working perfectly.
This is the only way to guarantee the machine's operating safety.

2.2 Reasonable foreseeable misuse

In the case of foreseeable misuses of the machine, the manufacturer's EC Declaration of Conformity and thus also the operating approval are automatically void.

Reasonable foreseeable misuses are:

- The processing of materials other than broadsheet.
- Operation in an area subject to explosion.
- Operation with removed protective devices.
- Operation of the machine without training or briefing of the operating personnel.
- Operation of the machine without the required personal protective equipment.
- Exceeding of the technical values specified for normal operation.
- Individual changes and rebuilding.
- Maintenance and cleaning intervals not adhered to.
- Maintenance and repair work that is not performed correctly.
- Wearing parts not replaced.
- Unintended use.

EMC behavior

The electromagnetic compatibility (EMC) of the machine can be impaired by additions or changes of any kind.

Therefore, do not make any additions or changes to the machine without consulting the manufacturer and procuring written permission.

Spare and wear parts

The use of spare parts and wear parts from third-party manufacturers can cause risks.
Use only original parts or parts approved by the manufacturer.

The manufacturer assumes no liability for damage from the use of spare parts and wearing parts not approved by the manufacturer.

2.3 Obligation and liability

The machine is built using the latest technology and according to acknowledged safety rules.

Nonetheless risks and damage can occur when using it:

- to the body and life of the operator or third parties,
- to the machine itself,
- to other property.

If the machine is:

- operated by untrained or uninstructed personnel,
- not used according to its intended use,
- not maintained or not maintained properly or serviced.

The machine is only to be used:

- For the intended use.
- If it is in perfect condition with respect to safety.
  Faults that can compromise safety must be remedied immediately.

2.4 Warranty

Our "General sales and delivery conditions" apply here.
Warranty and liability claims for personal injury and property damage are excluded if they are due to one or more of the following causes:

- Non-intended use of the machine.
- Improper assembly, start-up, operation or maintenance of the machine.
- Operation of the machine with improperly-mounted or defective protective devices and equipment.
- Failure to follow the instructions in the operating manual with respect to transport, installation, commissioning, operation, set-up, maintenance, and storage of the machine.
- Individual constructional changes to the machine.
- Failure to adhere to maintenance and cleaning intervals that exclude a breakdown of the machine.
- Defective monitoring of machine parts that are subject to wear, such as belts, tapes, brushes, and couplings.
- Installation of spare and wearing parts that were not ordered from the manufacturer.
- Cases of catastrophe and acts of God.

2.5 Residual risks

A risk analysis with risk assessment was conducted for this machine in accordance with DIN EN ISO 12100:2010.

The construction and model of the machine based on this analysis conform to the latest technological standards.

You can avoid residual risks by heeding and implementing these specifications:

- Safety labels on the machine.
- Basic safety instructions and special safety messages in this operating manual.
- Operating manual for the machinery.
- Operator directives.

The existing residual risks are listed in the following chapters according to the various life phases of the machine.

2.5.1 Transport, interim storage

- Crushing hazard during transport of the machine and machine parts.
- Use of unsuitable fork lifts.
- Tipping machine parts while unloading and installing the machine.
- Insufficient properties and condition of the underfloor.
- Wrong interim storage

2.5.2 Set-up, commissioning

- Use of unsuitable fork lifts.
- Tipping machine parts while unloading and installing the machine.
- Insufficient properties and condition of the underfloor.
- Hazardous voltage.
- Incorrect supply voltage
- Incorrect use of the sockets.
- Dismounted protective devices.
- Tripping points due to connecting cables lying around.

2.5.3 Adjustment and operation

- Dismantling, bridging or bypassing safety and protective devices.
- Operation without protective devices.
- Rotating machine parts.
- Setting of the roller pressure.
- Incorrect handling of the safety handwheels.
- High sound pressure.
- Paper jam.
- Tripping points due to cables lying around.

- Use of multiple adapter boxes in a machine combination.

2.5.4 Maintenance

Cleaning:

- Rotating machine parts.
- Heavy contamination.
- Unsuitable cleaning agents.
- Incorrect use of cleaning agents.
- Used cleaning cloths.
- Cleaning with compressed air.
- Incorrect cleaning of the fold rollers.
- Incorrect maintenance intervals during multi-shift operation.

Maintenance:

- Hazardous voltage.
- Dismantling, bridging or bypassing safety and protective devices.
- Operation without protective devices.
- Rotating machine parts.
- Crushing.
- Winding up.
- Wrong/poor maintenance tool.
- Improper maintenance.
- Incorrect maintenance intervals during multi-shift operation.

Repair:

- Improper repair.

2.5.5 Decommissioning, storage

- Incorrect storage.

2.5.6 Disposal

- Improper disposal

2.6 Product-specific hazards

2.6.1 Entanglement hazard and crushing hazard

Depending on the folding process, a folding machine has many rotating fold rollers and slitter shafts that run in opposite directions.

During all adjustment work on the fold rollers and slitter shafts, there is therefore an increased entanglement hazard and crushing hazard.

How to avoid injuries:

- ▷ Never reach into the fold rollers and slitter shafts while the machine is running.
- ▷ All adjustment and testing work may only be done on a machine that is switched off and secured against accidental switching on.
- ▷ Press the EMERGENCY STOP palm button.
- ▷ Adjustment and testing work must always be performed by one person only.
- ▷ There are also entanglement and crushing hazards when turning the machine with the safety handwheel!
- ✓ Injuries will be avoided.

2.6.2 Noise

There is a high sound pressure level on the buckle plates and on the folding knife with high production speeds and heavy papers.
This high sound pressure level can cause hearing damage.
See chapter “3.2.3.1 Noise emission”.

This is how to avoid hearing damage:

- ▷ Always wear ear protection when working on the machine.
- ▷ Always close the noise damping hoods whenever you work on the machine.
- ✓ Hearing damage will be avoided.

2.7 Life time

2.7.1 Life time of the machine

The life time of this machine is designed for 20 years.

2.7.2 Service life of the control-technical safety components

All components of the control-technical safety circuits have a life time of more than 20 years.

2.8 General safety instructions

2.8.1 Transport, interim storage

- Only specially-trained and authorized personnel may transport the machine.

2.8.2 Set-up, commissioning

- Only specially-trained and authorized personnel may set up and commission the machine.

2.8.3 Normal operation

- Only instructed operating personnel may operate the machine.
- The machine may be operated only if all protective devices, such as guards and emergency stop palm buttons, are present and fully functional.
- At least once per shift, the machine must also be checked for externally-visible damage. Changes, including to the operating behavior, must be reported immediately.
- Machine parts may not be used as climbing aids. If high machine parts must be reached: A suitable working stage or other platform must be used, which fulfills the safety-technical requirements such as height, stability, etc.

2.8.4 Setting up/equipping

- Only specially-trained and authorized personnel may set up the machine.
- Inform operating personnel before beginning set-up.
- If the machine is switched off for set-up, it must be secured against unauthorized or inadvertent switching on again.
  Use a padlock to secure the main switch against switching on. If necessary, attach a warning sign to the main switch.
- Machine parts may not be used as climbing aids. If higher machine parts must be reached, a suitable working stage or other platform must be used, which fulfills the safety-technical requirements such as height, stability, etc.
- If larger components or parts are replaced, corresponding lift equipment must be used to transport the components. Only use suitable and technically-perfect lift equipment and load suspension devices with sufficient carrying capacity. Secure components and parts so that they present no hazard.
  Do not linger or work under suspended loads.
- After completion of the work, do not leave any tools or other loose objects lying on the machine.

2.8.5 Maintenance and repair

- Maintenance and repair work may only be performed by specially trained technical personnel.
- Inform operating personnel before beginning service and maintenance work. Secure the service area if necessary.
- For all repair and maintenance work, heed the switch-on and switch-off procedures according to the operating manual.
- Heed the prescribed maintenance and maintenance intervals according to the operating manual.
- If the machine is switched off for service and/or maintenance work, it must be secured against unauthorized or inadvertent switching on again. Use a padlock to secure the main switch against switching on. If necessary, attach a warning sign to the main switch.
- If the dismounting of protective devices is necessary during maintenance and repair work, it must be replaced and checked to make sure it is functional immediately after completion of the work.
- After completion of the work, do not leave any tools or other loose objects lying on the machine.
- All operating and consumables as well as spare parts no longer needed must be disposed of safely and in environmentally-appropriate fashion.

2.8.6 Work on electrical equipment

- Only an electrically qualified person is permitted to perform work on the electrical systems or equipment.
- In case of faults in the electrical power supply, the machine must be switched off immediately.
- Only use original fuses with the prescribed amperage.

2.9 Personnel, qualification and duties

All activities at or on the machine must be carried out by authorized personnel only.

Authorized personnel is divided into several groups:

- Owner/operator
- Operating personnel
- Maintenance personnel

The authorized personnel must:

- have reached the age of 16,
- know and be able to apply the accident prevention regulations and safety instructions for the machine,
- have read chapter “2 Basic safety instructions” and be able to apply and implement it in practice,
- be trained and instructed according to the rules of conduct in the event of a fault,
- have the physical and mental abilities to carry out his or her responsibilities, tasks, and activities on the machine,
- be trained and instructed in accordance with his or her responsibilities, tasks, and activities on the machine,
- have understood and can implement practically the operating manual with respect to responsibilities, tasks, and activities for the machine.

2.9.1 Qualification of the personnel

This table lists the necessary qualification of the personnel related to the various activities at or on the machine.

	Specially trained personnel	Instructed operating personnel	Instructed personnel with specialized training (mechanical/ electrical engineering)
Transportation	X	-	-
Interim storage	X	-	-
Set-up	-	-	X
Electrical connections	-	-	X
Connection of the supply	-	-	X
Commissioning	-	-	X
Troubleshooting (mechanical/ electrical	-	-	X
Adjustment	X	X	-
Operation	-	X	-
Operational maintenance (cleaning)	-	X	-
Maintenance	X	-	X
Repair	-	-	X
Decommissioning	-	-	X
Storage	X	-	-
Disposal	X	-	-

Table 10: Qualification of personnel
Legend: X permitted, - not permitted

2.9.2 Duties of the operator

The owner/operator is responsible for

- the machine being operated only as intended,
- the machine being operated only when it is fully functional, safe and reliable,
- the machine being maintained and cleaned according to the specifications in the maintenance and cleaning schedule,
- the machine is protected against unauthorized use,
- the necessary personal protective equipment being available,
- the necessary personal protective equipment being worn,
- only authorized personnel having access to the machine,
- the authorized personnel being adequately qualified,
- the authorized personnel being instructed in all applicable questions of workplace safety, accident prevention, and environmental protection,
- the authorized personnel has read and understood the operating manual,
- the operating manual is always kept where the machine is used and it is freely accessible to the operating and maintenance personnel,
- the safety and notice signs on the machine are kept in an easily legible condition,
- a risk assessment of the entire system being carried out and its results being summarized in an operator directive,
- identified defects or abnormal operating states/jams being remedied immediately,
- operation of the machine being ceased during troubleshooting.

Germany The requirements of the German Labor Protection Act (ArbSchG) and the German Health and Safety at Work Regulations (BetrSichV) must be adhered to.

EC countries The requirements of the directives 89/391/EEC and 2009/104/EU must be adhered to.

2.9.3 Duties of the operating personnel

The operating personnel must:

- be trained and instructed,
- use the machine as intended,
- wear the necessary personal protective equipment,
- observe the basic regulations regarding workplace safety and accident prevention,
- read and heed the “2 Basic safety instructions” chapter and the safety messages in this operating manual,
- immediately take the machine out of operation in the event of defects or abnormal operating states/malfunctions,
- immediately report any identified defects or abnormal operating states/ malfunctions.

The operating personnel is responsible for

- protecting the machine against unauthorized use,
- ensuring that the machine is operated only when it is fully functional, safe and reliable,
- carrying out the cleaning according to the maintenance schedule.

2.9.4 Duties of the maintenance personnel

The maintenance personnel must:

- be trained and instructed,
- use the machine as intended,
- wear the necessary personal protective equipment.

The maintenance personnel is responsible for

- protecting the machine against unauthorized use,
- the maintenance being carried out according to the maintenance schedule.

2.10 Personal protective equipment

2.10.1 Operation and adjustment



This personal protective equipment must be provided and worn for the operation and set-up of the machine:

- Ear protection
- Cut-resistant safety gloves
- Safety shoes

2.10.2 Operational maintenance (cleaning)



This personal protective equipment must be provided and worn for the proper maintenance (cleaning) of the machine:

- Safety glasses
- Suitable safety gloves
- Safety shoes

2.11 Work areas and workstations

- The machine is intended exclusively for operation by one person.
- The figure shows the most important workstations as well as the working area and service area of the machine.
- The necessary work areas for operation, installation, commissioning, and maintenance are highlighted in gray and should be at least 100 cm.
- The service area is highlighted shaded.
- The possible workstations are marked with an "X."

2.11.1 Z 2

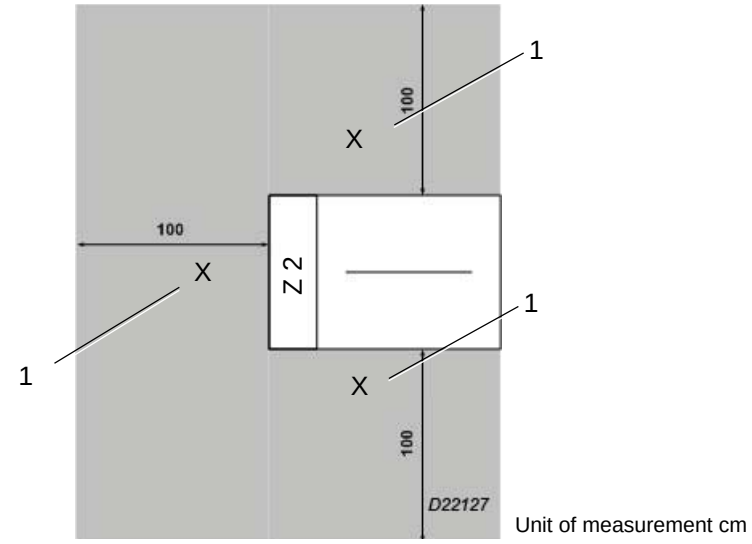

1 Workstations

Illustration 1: Work areas and workstations

2.11.2 Z 6

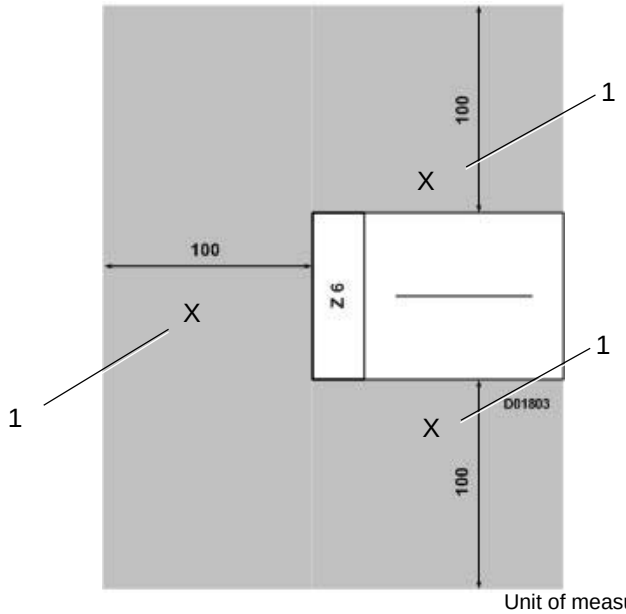

Unit of measurement cm

1 Workstations

Illustration 2: Work areas and workstations

2.12 Markings on the machine

These markings must be on the machine and in an easily legible condition. If they are damaged or illegible, they must be replaced.
For the appropriate MBO part number, see chapter “2.12.1 Position and meaning”.

2.12.1 Position and meaning

Pos. 1	MBO part number: 10.5171.025

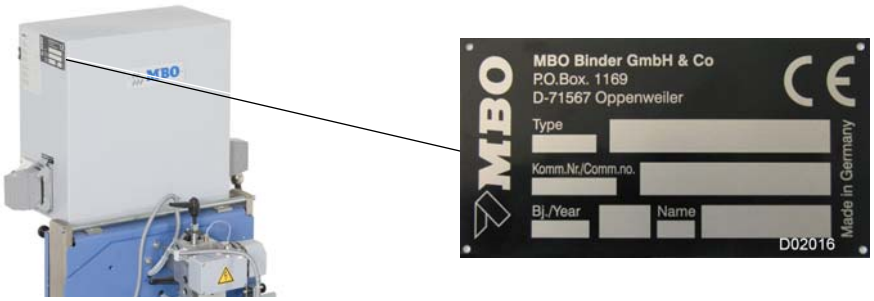

Meaning: Name plate

Illustration 3: Name plate

Pos. 2	MBO part number: 10.5171.026

Meaning: Electric name plate

Illustration 4: Electric name plate

Pos. 3	MBO part number: 0128301

Meaning:

Hazardous voltage.

Non-observance will result in serious injury or death.

- Only an electrically qualified person may perform work on the machine's electrical system.
- Follow the local occupational safety regulations and electrotechnical regulations.
- On the supply terminals and on the terminals of the main switch, there is hazardous voltage even when the main switch is switched off (see wiring diagram).
- There is hazardous residual voltage on the connection terminals of the frequency inverter even when the main switch is switched off. (heed capacitor discharge time).

Illustration 5: Hazardous voltage

2.13 Directions for emergencies

The operator must add instructions regarding national regulations for accident prevention to this operating manual.

2.13.1 Emergency call numbers

European Union	Police Fire department Ambulance	112 112 112
Germany	Police Fire department Ambulance	110 or 112 112 112
USA	Police Fire department Ambulance	911 911 911
China	Police Fire department Ambulance	110 119 120

Table 11: Emergency call numbers

2.13.2 Behavior in case of accidents

1 Immediate measures		• Stay calm. • Secure the accident location. • Heed your own safety. • If necessary, rescue person from the danger zone. • Check consciousness and breathing/check for type of injury. • If necessary, take lifesaving measures right away.
2 Emergency call		• Where is the accident location? • What happened? • How many injured? • What injuries? • Who's calling? • Wait for queries!
3 First aid		• Provide help as necessary. • Check consciousness and breathing. • Protect against heat loss. • Provide support and assistance.

Table 12: Behavior in case of accidents

3 Product description

3.1 Important notices about the product

3.1.1 Z2 overall view

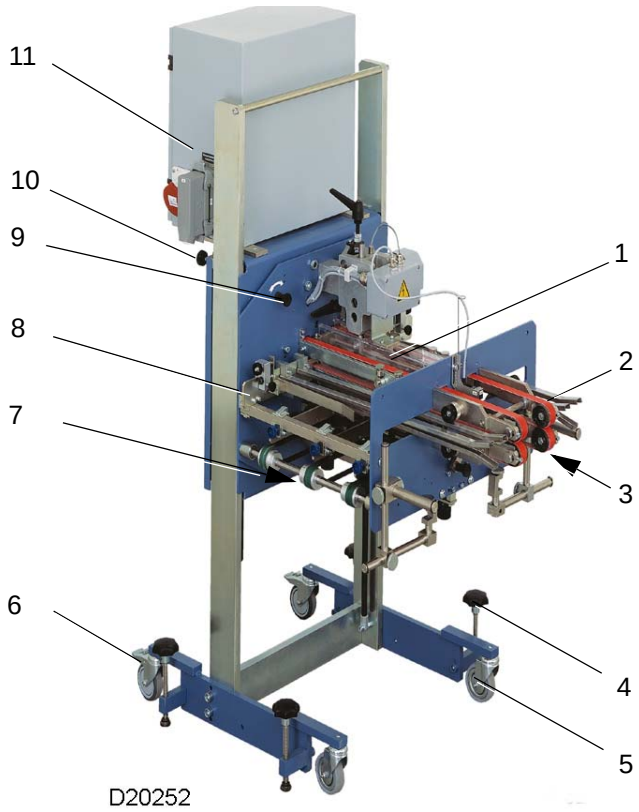

1 Folding knife 2 Transport tapes 3 Sheet infeed 4 Locking screws 5 Swivel casters 6 Swivel casters with brake	7 Sheet outfeed 8 Folding sheet stop 9 Index bolt, swiveling device 10 Height adjustment 11 Control cabinet

Illustration 6: Z2 overall view

3.1.1.1 Standard equipment

- Machine control
- Mobile
- Self-control, (control-dependent)
- Built-in drive
- Works from the top and bottom (swivel function).

3.1.2 Z6 overall view

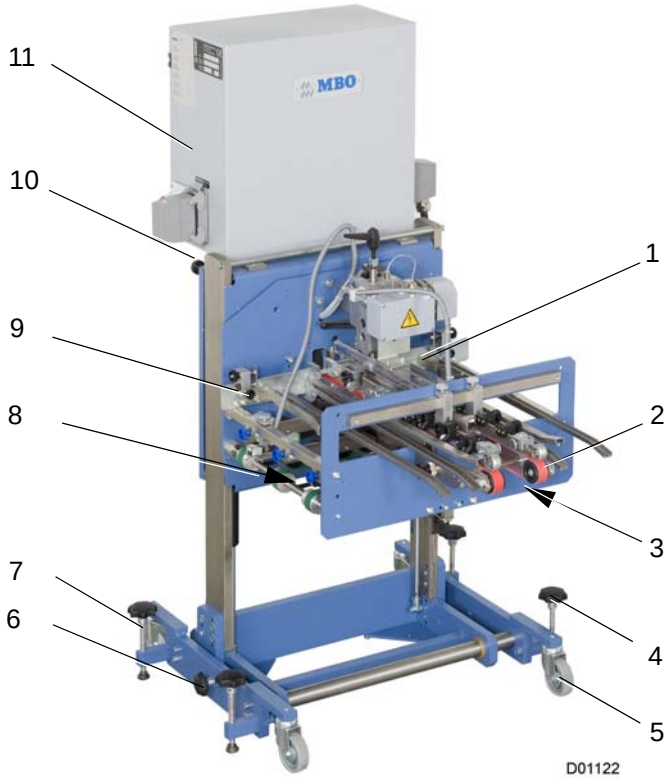

1 Folding knife	7 Swivel casters with brake
2 Transport tapes	8 Sheet outfeed
3 Sheet infeed	9 Folding sheet stop
4 Locking screws	10 Index bolt, swiveling device
5 Swivel casters	11 Height adjustment
6 Lateral adjustment	12 Control cabinet

Illustration 7: Z6 overall view

3.1.2.1 Standard equipment

- Machine control
- Mobile
- Self-control, (control-dependent)
- Built-in drive
- Works from the top, no swivel function.

3.2 Technical data

3.2.1 Floor plan

3.2.1.1 Z2

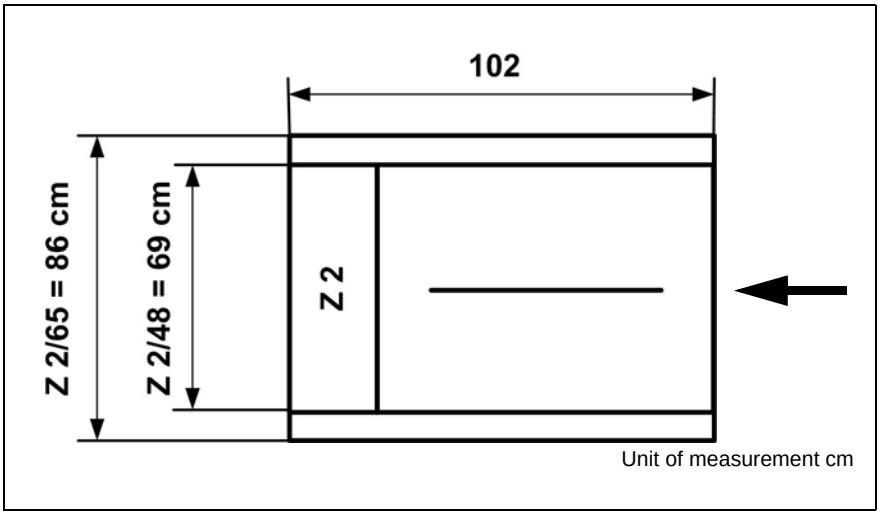

Illustration 8: Z 2 floor plan

3.2.1.2 Z6

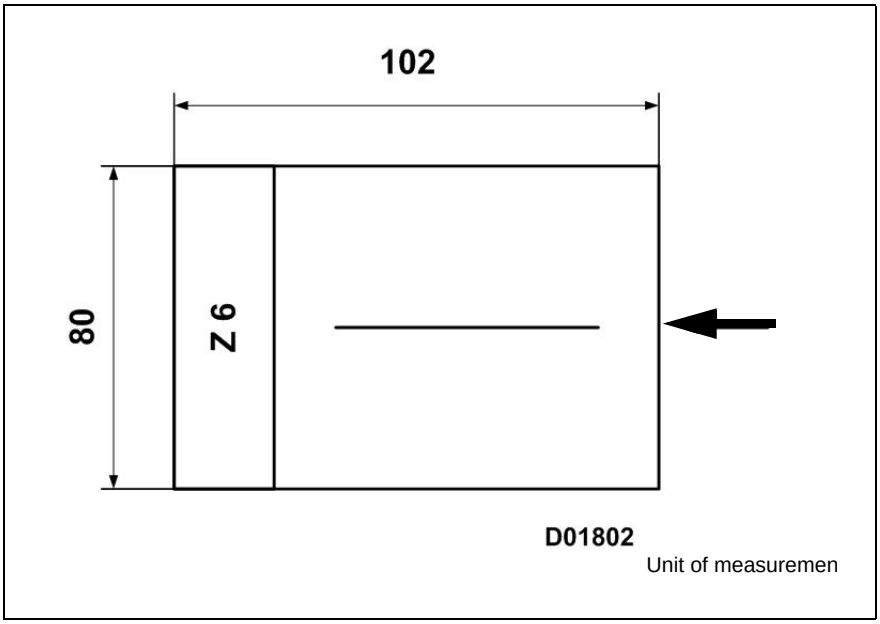

Illustration 9: Z 6 floor plan

3.2.2 Performance characteristics

Speed [a)]		Minimum	Maximum
	MC-Control	30 m/min	160 m/min
	NC-Control	30 m/min	160 m/min
	VC-Control	30 m/min	160 m/min
	M1 - Control	30 m/min	160 m/min
Power			15,000 cycles/h
Infeed width	**Z 2/48, Z6**	15.0 cm	48.0 cm
	Z 2/65	15.0 cm	65.0 cm
Infeed length		8.0 cm	32.0 cm
Infeed height	**Z 2/48, Z2/65**	45.0 cm	95.0 cm
	Z 6	45.0 cm	65.0 cm
Exit height[b)]	**Z 2/48, Z2/65**	35.0 cm	105.0 cm
	Z 6	35.0 cm	55.0 cm
Outfeed direction	**Z 2/48, Z2/65**	Left or right	
	Z 6	Left	
Product thickness			6.0 mm

Table 13: Performance characteristics

a) The maximum working speed depends on paper properties, format, fold type, temperature, and humidity, as well as various states at the operator that the manufacturer cannot influence.
b) Depending on the infeed height and the folding knife position

3.2.3 Emissions

3.2.3.1 Noise emission

Noise emissions		
Specified two-digit noise emissions value according to DIN EN 4871	Idling	Load
A-weighted sound power level L_{WA} in dB re 1 pW Uncertainty K_{WA} in dB	- 2.5	- 2.5
A-weighted emission sound pressure level L_{PA} In dB re 20 µPa at the operating place Uncertainty K_{WA} in dB	 70 2.5	 75.5 2.5
The values were determined in accordance with the noise emission standard DIN EN ISO 13023 [a)] using the basic standards DIN EN ISO 3746 and DIN EN ISO 11204		

Table 14: Noise emissions

a) Noise measurement EN 13023 J.2.2.2 - Class 2

3.2.4 Shipping and transport data

Weight piece		**Net**	**Gross**
Z 2/48	**Shipping pallet**	240 kg	270 kg
Z 2/48	**Shipping crate**	240 kg	300 kg
Z 2/65	**Shipping pallet**	250 kg	280 kg
Z 2/65	**Shipping crate**	250 kg	310 kg
Z 6	**Shipping pallet**	240 kg	270 kg
Z 6	**Shipping crate**	240 kg	300 kg
Dimensions			
Z 2/48	**Shipping pallet**	110 x 85 x 140 (cm)	
Z 2/48	**Shipping crate**	115 x 90 x 145 (cm)	
Z 2/65	**Shipping pallet**	110 x 95 x 140 (cm)	
Z 2/65	**Shipping crate**	115 x 100 x 145 (cm)	
Z 6	**Shipping pallet**	110 x 85 x 140 (cm)	
Z 6	**Shipping crate**	115 x 90 x 145 (cm)	
Fork lift [a)]	Carrying capacity / load (Q) [b)]	Min. 1000 kg	
	Fork tine length	Min. 100 cm	
Floor conditions	Cargo [c)]	> 11 kN/m^2	
	Levelness [d)]	< 10 mm/m	

Table 15: Shipping and transport data, fork lift and floor conditions

a) Minimum requirements of the fork lift
b) Heed operating manual for the fork lift, load capacity depends on the load center of gravity (c).
c) Minimum load capacity of the floor where the machine will be set up
d) In the area of the machine, the total height difference may not exceed 10 mm.

3.2.5 Electrical supply

The machine was designed for one of the nominal voltages listed below.

Electrical supply	Wiring diagram no. See electrical name plate		
Nominal voltage **3 x 400 V + N + PE** [a)]	Required mains configuration [b)]	TN - C - S - power mains TN - S - power	Clockwise rotating field required
	Voltage	400 V AC	+/-10%
	Frequency	50 Hz	+/-1 %
	Fuse protection (MC-, NC- and VC-Control)	16 A	
	Fuse protection (M1-Control)	32 A	
Connected loads		0.37 kW	

Table 16: Electrical supply 400V network

a) *If the existing nominal voltage varies from the supply voltage specified above, an isolating transformer must be installed.*
If the nominal voltage is 380 V or 415 V at 50 Hz, the tolerance of the power mains must be checked.
If the tolerance is between 360 V – 440 V, an isolating transformer is not required.
b) *N - line is loaded; a fault-current circuit breaker (FI) may not be used.*

Electrical supply	Wiring diagram no. See electrical name plate		
Nominal voltage **3 x 220 V + PE** [a)]	Required mains configuration [b)]	TN - C - power mains	Clockwise rotating field required
	Voltage	220 V AC	+/-10%
	Frequency	60 Hz	+/-1 %
	Fuse protection (MC-, NC- and VC-Control)	16 A	
	Fuse protection (M1-Control)	32 A	
Connected loads		0.37 kW	

Table 17: Electrical supply 220V power mains

a) *If the existing nominal voltage varies from the supply voltage specified above, an isolating transformer must be installed.*
If the nominal voltage is 210 V or 230 V at 60 Hz, the tolerance of the power mains must be checked.
If the tolerance is between 200 V – 240 V, an isolating transformer is not required.
b) *A fault-current circuit breaker (FI) may not be used.*

3.2.6 Ambient conditions

Operating temperature		17 ... 35 °C
Storage temperature		10 ... 35 °C
Relative humidity	Optimal Minimum Maximum	40 - 60 % 30 % 80 % (non-condensing)
Set-up height [a)]		Max. 1500 m above sea level

Table 18: Ambient conditions

a) For installation at an altitude of 1000 m above sea level or higher, a power reduction of 1 % per 100 m should be incorporated.

4 Structure and function

4.1 Introduction

4.1.1 What is folding?

Folding is the sharp-edged bending of a non-prepared or prepared bending point along a straight line, according to specified dimensions and a predetermined scheme under pressure.
According to bookbinding terminology, the folding line is called a fold.

4.1.2 Folding principles

Knife fold principle

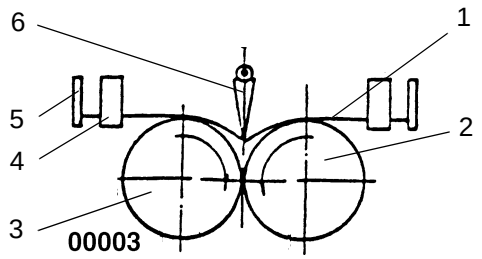

1 Paper sheet 2 Fold roller 3 Fold roller	4 Sheet stop 5 Lateral sheet stop 6 Folding knife

Illustration 10: Knife fold principle

To create a knife fold, two fold rollers rotating in opposite directions and a folding knife that can be moved vertically are required.

- The sheet of paper (1) is transported under the folding knife (6) to the sheet stop (4) and aligned by the lateral sheet stop (5).
- After triggering the knife movement, the folding knife conveys (4) the sheet of paper (1) in the direction of the fold rollers (2) and (3).
- The sheet of paper (1) is grasped by the fold rollers (2) and (3) folded during its passage.

4.2 Structure

4.2.1 Z 2 overall view

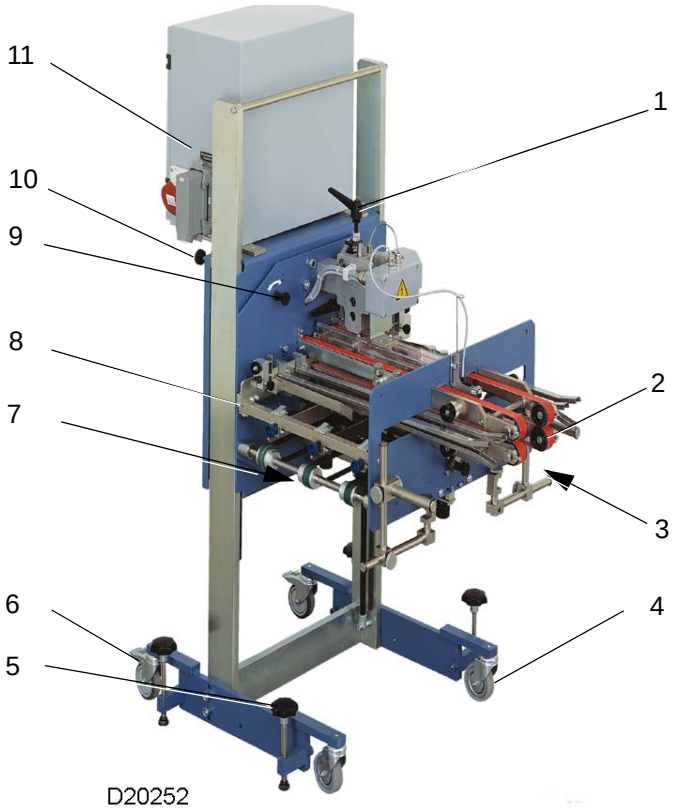

1 Adjustment lever 2 Transport tapes 3 Sheet infeed 4 Swivel casters 5 Locking screws 6 Swivel casters with brake	7 Sheet outfeed 8 Sheet stop 9 Swiveling the knife folding unit 10 Height adjustment 11 Control cabinet

Illustration 11: Z 2 overall view

4.2.2 Z 6 overall view

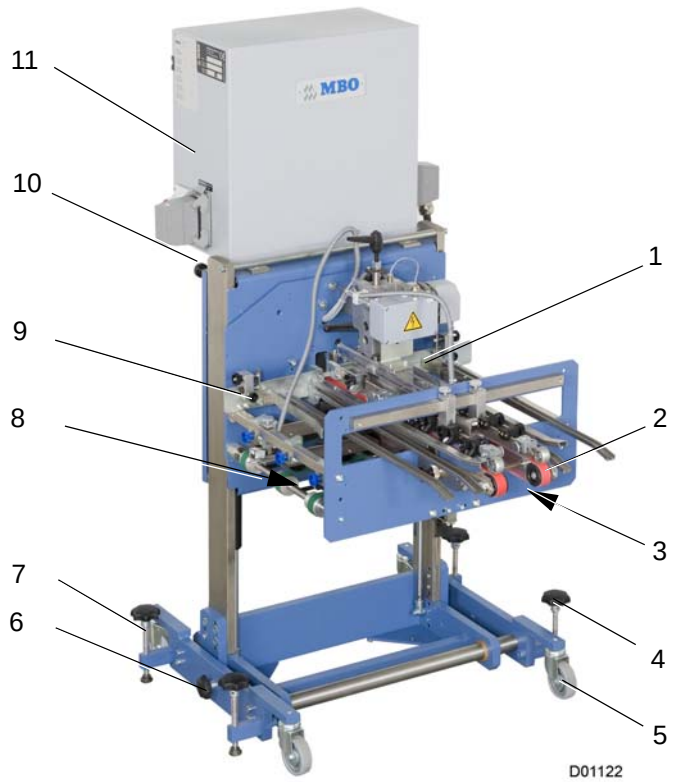

1 Folding knife	7 Swivel casters with brake
2 Transport tapes	8 Sheet outfeed
3 Sheet infeed	9 Folding sheet stop
4 Locking screws	10 Index bolt, swiveling device
5 Swivel casters	11 Height adjustment
6 Lateral adjustment	12 Control cabinet

Illustration 12: Z 6 overall view

4.3 Functional description

4.3.1 Z 2

The Z 2 folding unit:

- A separate, mobile fourfold folding unit with built-in drive for the production of various fourfold works.
- Intended for use on combi or buckle folding machines.
- Has a swivel function and works from both the top and bottom.
- Thanks to self-control, (control dependent), it can also be used on older machines or third party machines.

Folding unit Z 2 permits the following additional uses.

- As folding unit IV for 32 pages on combi and buckle folding machines, for manufacturing English, German and international fourfolds and special folding types.
- As folding unit III on buckle folding machines - the folded material can be led back to the central control panel.
- For folds parallel to the back fold after the first and second cross fold on combi folding machines, combined with the cross carrier.
- For double gate folds on buckle folding machines after folding unit II and on combi folding machines in combination with the cross carrier.

4.3.2 Z 6

The Z 6 folding unit:

- A separate, mobile fourfold folding unit with built-in drive for the production of various fourfold works.
- Intended for use on combi or buckle folding machines.
- No swivel function and only works from the top.
- Thanks to self-control (control dependent), it can also be used on older machines or third party machines.

Folding unit Z 6 permits the following additional uses.

- As folding unit IV for 32 pages on combi and buckle folding machines.
- On combi folding machines with KL and S-KTL configuration for English fourfold.
- On combi folding machines with S-KTZ configuration for English and German fourfold.
- On buckle folding machines, e.g. with the configuration 442 for English fourfold.

4.4 Machine variants

4.4.1 "Z 2" variant

Definition of terms

The designation "Z 2" means:	
Z	Knife folding unit
2	Variant designation

Table 19: Z 2 variant

4.4.2 "Z 6" variant

Definition of terms

The designation "Z 6" means:	
Z	Knife folding unit
6	Variant designation

Table 20: Z 6 variant

4.5 Machine control variants

4.5.1 MC-Control

Functions:

- Control of the machine combination
  - Machine start
  - Machine stop
  - Sheet feed, single sheet and production
- Speed setting, local
- Digital knife control inclusive jam control
- Self-control

4.5.2 NAVIGATOR-Control

Functions:

- Control of the machine combination
  - Machine start
  - Machine stop
  - Sheet feed, single sheet and production
- Speed setting, local and for the machine combination
- Automatic knife control
- Sheet monitoring
  - Sheet length control
  - Sheet-monitoring system
- Self-control

4.5.3 VARIO-Control

Functions:

- Control of the machine combination
  - Machine start
  - Machine stop
  - Sheet feed, single sheet and production
- Speed setting, local
- Automatic knife control
- Sheet monitoring
  - Sheet length control
  - Sheet-monitoring system
- No self-control

4.5.4 M1 - Control

4.5.4.1 Basic

Functions:

- Control of the machine combination
  - Machine start
  - Machine quick stop
  - Sheet feed, single sheet and production
- Speed setting, local and for the machine combination.
- Sheet monitoring
  - Sheet length control
- No self-control

4.5.4.2 Advanced

Functions:

- Control of the machine combination
  - Machine start
  - Machine quick stop
  - Machine soft stop
  - Sheet feed, single sheet and production
- Speed setting, local and for the machine combination.
- Sheet monitoring
  - Sheet length control
  - Sheet-monitoring system
- Touchscreen
- No self-control
- Remote access system (RAS), option

4.6 Protective devices

4.6.1 Definition of terms

4.6.1.1 Fixed guards

Fixed guards:

- are used if access to the area secured by the protective device is seldom or never required.
- must only be loosened or removed using tools.
- do not have any electric locking (safety switch).

4.6.1.2 Interlocking movable guards

Interlocking movable guards:

- are used if access to the area secured by the protective device is frequently required.
- can be opened without tools.
- have electric locking (safety switch).

  When the protective device is opened, this causes the machine to stop. The machine can be restarted only after the protective device is closed.

4.6.1.3 Interlocking movable guards with guard locking

Interlocking movable guards with guard locking:

- cannot be opened when the machine is operating.

  The locking prevents access to the danger spot until the hazardous function has been eliminated.
- can be opened without tools.
- have electric locking (safety switch) and a guard locking.

  When the protective device is lifted, the electric locking causes the machine to stop.
  Only when the hazardous function has been eliminated safely is the guard locking reset and then the protective device can be opened completely.
  The machine can be restarted only after the protective device is closed.

4.6.2 Overview

The following safety and protective devices are present at or on the machine.

Operate the machine only if all safety and protective devices are completely present and fully functional!

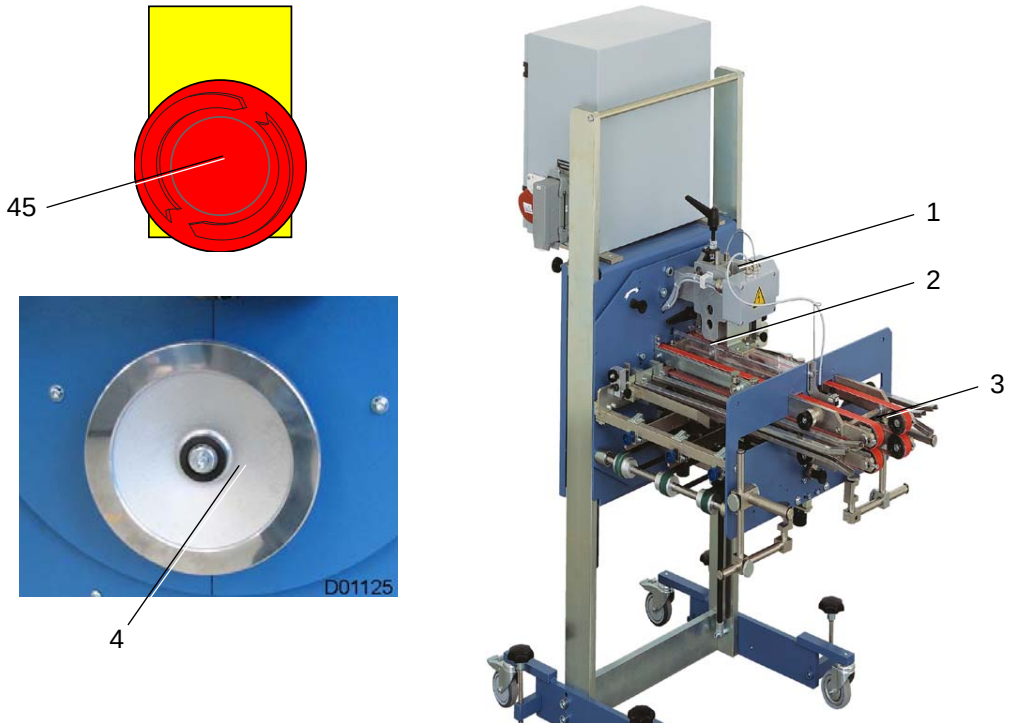

1 Fixed guard
2 Fixed guard
3 Fixed guard
4 Safety handwheel
5 EMERGENCY STOP palm button

Illustration 13: Overview

4.6.3 EMERGENCY STOP palm button

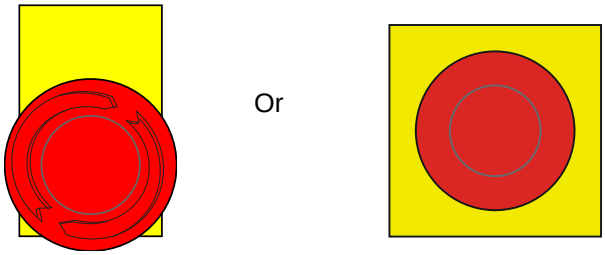

1 EMERGENCY STOP palm button

Illustration 14: EMERGENCY STOP palm button

- To prevent immediate or potential hazards, the machine is equipped with an EMERGENCY STOP shut-off device.
- After the <EMERGENCY STOP> palm button is pressed, all electrical drives are switched off.
- EMERGENCY STOP does not disconnect the machine from the electrical supply.

The machine is in operation.
There is a hazardous situation and the machine must be stopped quickly.

Procedure:

▷ Press the EMERGENCY STOP palm button (1).
▷ Eliminate the failure.
▷ Disengage the EMERGENCY STOP palm button by turning it towards the right.

✓ The machine is ready for operation.

When the EMERGENCY STOP palm button is pressed, the machine is stopped immediately.
No emptying of the sheets takes place!

4.6.4 Safety handwheel

WARNING!

Incorrect handling of the safety handwheels.

Non-observance could result in serious injury or death.

- Turn the safety handwheel only when the machine is not moving.
- Press the EMERGENCY STOP palm button.
- Operate the machine only with safety handwheels installed. Otherwise there is hazard of being drawn in.
- Replace defective safety handwheels only with new safety handwheels with an overrunning clutch.

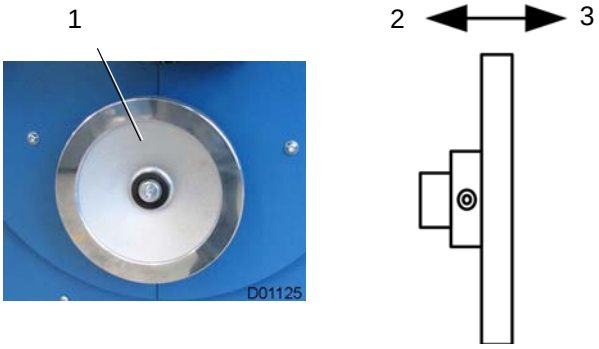

1 Safety handwheel 2 Overrunning clutch position	3 Manuel drive position

Illustration 15: Safety handwheel

The safety handwheel has an overrunning clutch and is intended for turning the machine manually:

- during setup tasks,
- when there is a paper jam.

Procedure:

▷ Stop the machine.

▷ Press the EMERGENCY STOP palm button.

▷ Pull the safety handwheel (1) towards you.

The overrunning clutch is released.

▷ Turn the safety handwheel.

Direction of rotation:

Clockwise = Machine rotates forwards.

Counterclockwise = Machine rotates backwards.

✓ The safety handwheel is operated correctly.

4.6.5 Fixed guards

There are other fixed guards present on the machine.

These protect the operator against danger spots such as:

- rotating machine parts, e.g., drives, shafts
- entanglement zones
- pinch points

The function and position of the corresponding guards are listed in the "Safety and protective devices" check list.

See chapter “4.6.8 Check list for safety and protective devices”.

4.6.6 Faulty safety and protective devices

Faulty safety and protective devices can lead to hazardous situations.

For this reason:

▷ Switch off the machine at the main switch immediately,
▷ Secure it against being switched on again,
▷ If necessary, disconnect the supply of compressed air and electrical current.
▷ Service faulty safety and protective devices immediately.
✓ The machine is switched off correctly.

4.6.7 Checking safety and protective devices

All safety and protective devices must be checked regularly.

For the corresponding inspection intervals, see chapter “4.6.8 Check list for safety and protective devices”

For the corresponding procedure, see the Maintenance chapter.

4.6.8 Check list for safety and protective devices

Use this checklist to check the protective devices of the machine regularly

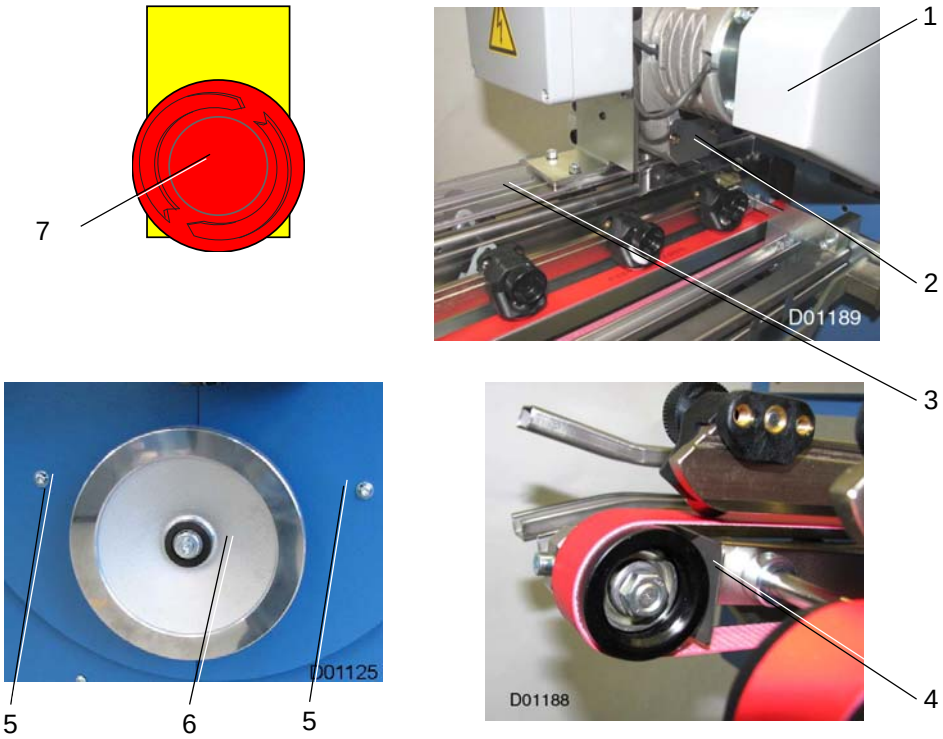

Pos.	Designation	Functioning control	Visual inspection	Result	Inspection interval
1	Guard over drive belt				Weekly
2	Knife guide guard				Weekly
3	Guard over folding knife				Weekly
4	Transport belts guard				Weekly
5	Guard over drive (x2)				Weekly
6	Safety handwheel				Weekly
7	EMERGENCY STOP palm button				Daily
Date:		Name:		Signature:	

Table 21: Check list for safety and protective devices

5 Operating and display elements, operating modes

5.1 Operating and display elements

5.1.1 Control panel MC-Control

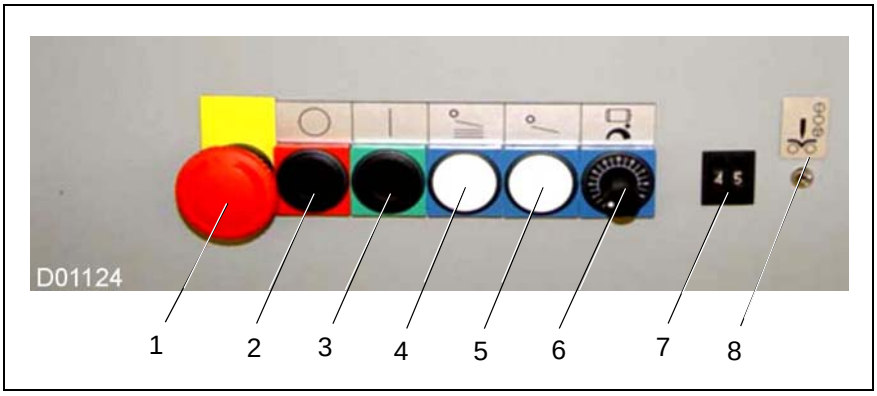

Illustration 16: Control panel

1 Palm button <EMERGENCY STOP>
2 <Machine stop> button
3 <Machine start> button
4 <Sheet infeed, production> button
5 <Sheet infeed, single sheet> button
6 <Speed> potentiometer
7 Decade switch (folding knife control)
8 Toggle switch (folding knife actuation)
Top position = production
Center position = off
Bottom position = single stroke

5.1.2 Control panel NAVIGATOR-Control

5.1.2.1 Complete operating terminal

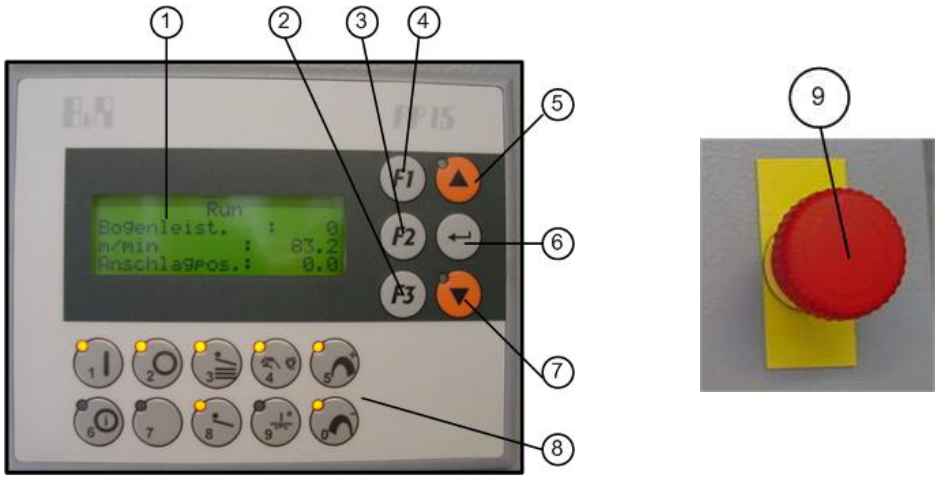

Illustration 17: Control panel Navigator-Control

1 LC-Display 4 x 20 characters 2 Function key F3 menu group "Service" 3 Function key F2 menu group "Parameters" 4 Function key F1 menu group "Run"	
Machine control	**Numeric input**
5 Scroll button/change direction. 6 Operating mode button (Enter) 7 Scroll button/change direction. 8 Keypad 9 Palm button EMERGENCY STOP	Move cursor to the next input field. Input mode, value transfer Move cursor to the next input field.

5.1.2.2 Keypad

All buttons have a double function (machine control/numeric input).

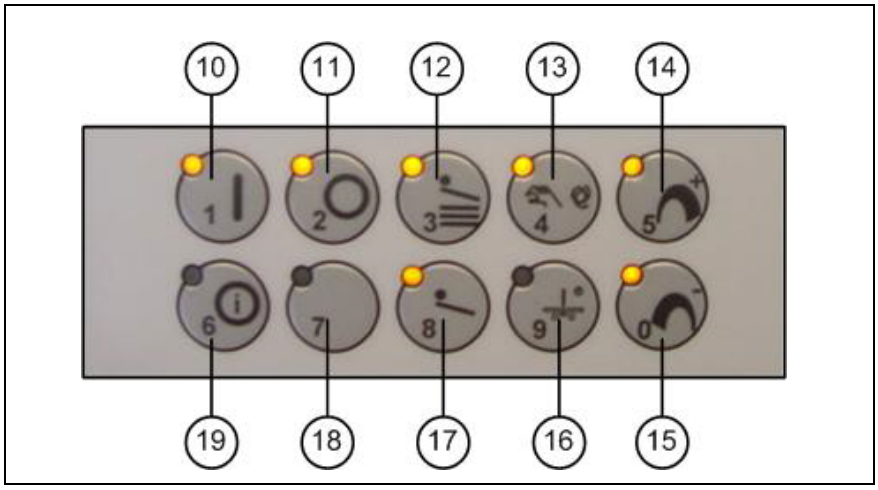

Illustration 18: Keypad

Machine control	Numeric input
10. Machine start	1
11. Machine stop	2
12. Sheet infeed, production	3
13. Knife actuation: Automatic/ manual actuation	4
14. Value change **+**	5
15. Value change **-**	0
16. Folding knife manual actuation	9
17. Sheet infeed, single sheet	8
18. Not assigned	7
19. Delete errors	6

5.1.3 Control panel VARIO-Control

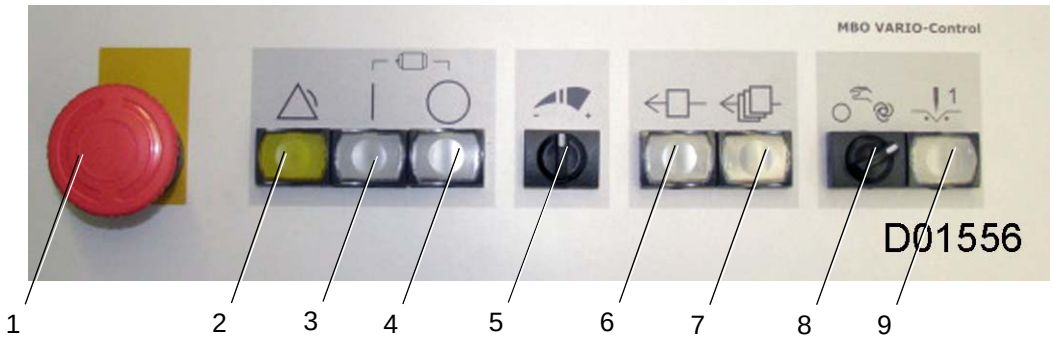

Illustration 19: Control panel VARIO-Control

1 Palm button <EMERGENCY STOP>
2 <Display/reset error message/quality control> illuminated push button
3 <Machine start> button
4 <Machine stop> button
5 <Speed> selector button
6 <Sheet infeed, single sheet> button
7 <Sheet infeed, production> button
8 <Manual/automatic folding knife actuation> selector switch
9 <Folding knife actuation single stroke> button

5.1.4 Control panel M1-Control, Basic

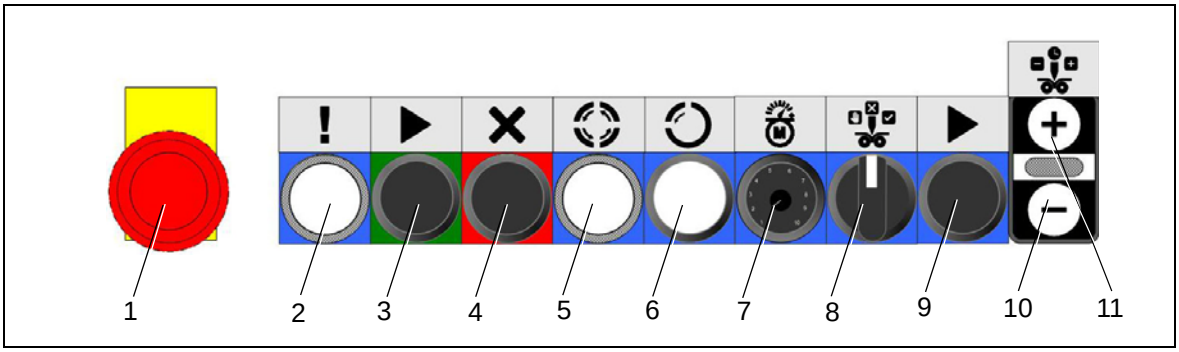

Illustration 20: Control panel M1 Control

1 Palm button <EMERGENCY STOP>
2 <Error message> illuminated push button
3 <Machine start> button
4 <Machine stop> button
5 <Sheet infeed, production> button
6 <Sheet infeed, single sheet> button
7 <Speed> potentiometer
8 <Folding knife actuation> selector switch
Left position = manual
Center position = off
Right position = production
9 <Single stroke, folding knife> button
10 <Folding knife actuation +> button
11 <Folding knife actuation -> button

5.1.5 Control panel M1-Control, Advanced

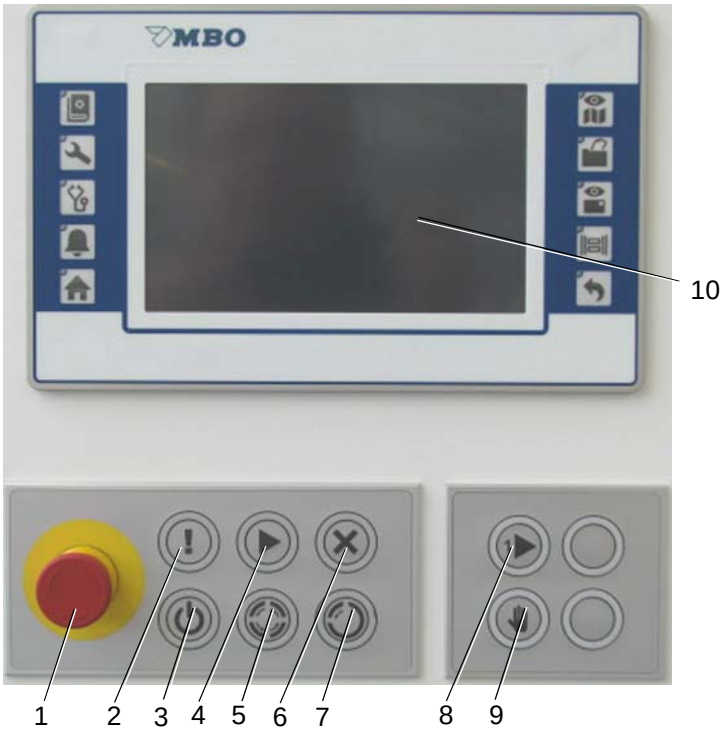

Illustration 21: Control panel M1-Control, Advanced

1 Palm button <EMERGENCY STOP>
2 <Reset error message> button
3 <Machine soft stop> button
4 <Machine start> button
5 <Sheet infeed, production> button
6 <Machine stop> button
7 <Sheet infeed, single sheet> button
8 <Folding knife on/off> button
9 <Single stroke, folding knife> button
10 Touchscreen
The operation of the touchscreen is identical to folding unit I and is described in the operating manual for folding unit I.

5.2 Operating modes

CAUTION!

Tripping points due to cables lying around.

Non-observance could result in injury.

Lay the machine connections (cables, hoses, pipes) so that there are no tripping points.

5.2.1 MC-Control and Navigator-Control

5.2.1.1 Machine control

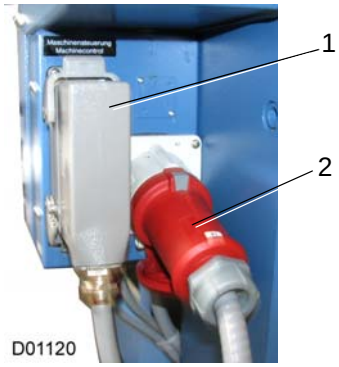

1 Control plug	2 Power plug

Illustration 22: Electrical connection

Procedure:

1) Plug the power plug (2) into the power socket of the previous folding unit.
2) Plug the control plug (1) into the control socket of the previous folding unit.

✓ The machine is electrically connected.

5.2.1.2 Self-control operating mode

WARNING!

"Self-control" operating mode

Non-observance could result in serious injury or death.

If an MBO unit is operated in the "Self-control" operating mode in line with non-MBO machines, there is no common safety shut down.

- Every machine must be switched off separately in the event of a hazardous situation.
- Protect yourself accordingly or use an appropriate MBO adapter box. You can get the necessary information from the manufacturer.

The manufacturer does not accept any liability for damage occurring due to the lack of safety shut down on both machines!

The folding unit and third party machine must be switched on and off separately!

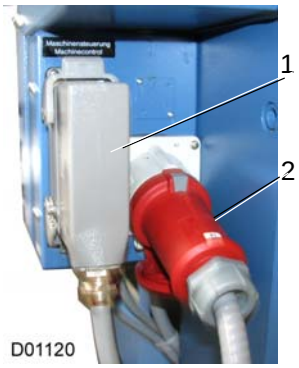

1 Control plug	2 Power plug

Illustration 23: Electrical connection

The folding unit can also be operated on third party machines thanks to the self-control.

Procedure:

1) Plug the power plug (2) into the power socket on the third party machine or into the mains supply power socket.
2) Plug the control plug (1) into the "self-control" control socket of the folding unit.
3) Plug the dummy plug (1) into the machine control of the folding unit.

✓ The machine is in self-control mode.

5.2.2 VARIO-Control

5.2.2.1 Machine control operating mode

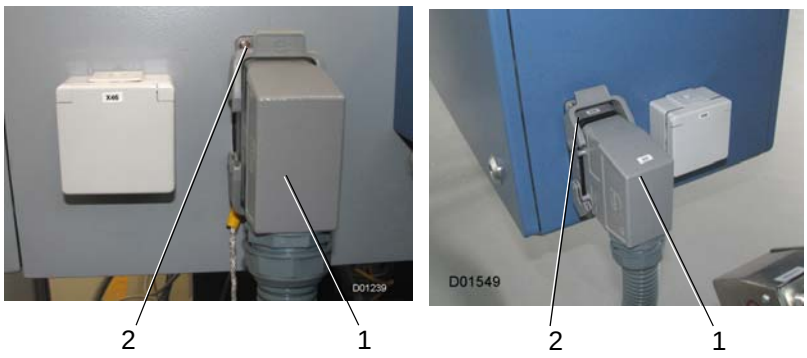

1	Subsequent folding unit control plug	2	Folding unit control socket

Illustration 24: Connection to folding units I and II

Procedure:

▷ Plug the control plug (1) of the z-folding unit into the control socket (2) from folding unit I or II. Connection of subsequent folding units or deliveries.

✓ The machine is electrically connected.

5.2.2.2 Self-control operating mode

The folding unit cannot be operated in self-control mode.

5.2.3 M1-Control, Basic and Advanced

5.2.3.1 Machine control operating mode

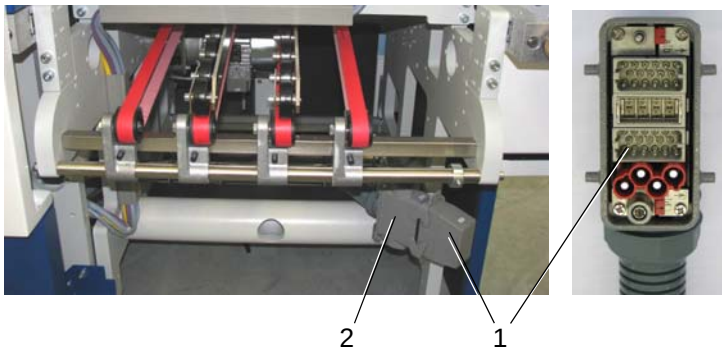

1	Folding unit control plug	2	Folding unit control socket 1

Illustration 25: Connection to folding units I and II

Procedure:

▷ Plug the control plug (1) into the control socket (2) from folding unit I or II.

5.2.3.2 Self-control operating mode

The z-folding unit cannot be operated in self-control mode.

5.2.4 Adapter box operating mode

WARNING!

Use of multiple adapter boxes in a machine combination.

Non-observance could result in serious injury or death.

For technical safety reasons, use a maximum of **one adapter box in a machine combination.**

It is possible to interconnect subsequent MBO folding units with different control systems to a machine combination. The relevant adapter boxes are required to do this.

Details of which adapter boxes can be used is available from MBO Service or from authorized customer services.

For technical safety reasons, it is only permitted to use a maximum of **one adapter box** in a machine combination.
Exceptions are only permitted following consultation with the MBO electrical engineering department.

6 Transport, interim storage

6.1 Introduction

6.1.1 Qualification of personnel

This table lists the necessary qualification of the personnel related to "Transport and interim storage" of the machine.

	Specially trained personnel	Instructed operating personnel	Instructed personnel with specialized training (mechanical/ electrical engineering)
Transportation	X	-	-
Interim storage	X	-	-

Table 22: Qualification of personnel; Transport, interim storage
Legend: X permitted, - not permitted

6.1.2 Safety instructions

WARNING!

Use of unsuitable fork lifts.

Non-observance could result in serious personal injury or property damage.

- When selecting a fork lift, observe the relevant data such as load-bearing capacity, load center of gravity, width of forklift carrier and length of forks.
- For details about the minimum requirements, please see the "Technical data" chapter.

WARNING!

Tipping machine parts while unloading and installing the machine.

Non-observance could result in serious personal injury or property damage.

- Use a fork lift for transportation.
- Use transport tapes as the lifting equipment.
- No people may linger in the unloading area.

WARNING!

Insufficient properties and condition of the underfloor.

Non-observance could result in serious personal injury or property damage.

Check the properties and condition and load rating of the subsurface in the set-up location.

For necessary minimum requirements, please see the "Technical data" chapter.

6.2 Packaging

6.2.1 Machine

The machine is delivered as follows:

- On a shipping pallet (Europe)
- In a shipping crate (overseas).

In addition, it is covered with plastic foil that is fastened to the transport pallet.

6.2.2 Accessories/options

Standard accessories, tools, options, and documentation are packaged with the machine or accommodated in separate cartons or containers.

▷ Be sure to unpack these carefully.

6.2.3 Incoming inspection

▷ When you receive the shipment, check the packaging right away for transport damage.

▷ Check the machine and accessories for transport damage.

▷ Check that the shipment is complete based on the delivery note.

✓ Incoming inspection is complete.

6.2.4 In case of damage

- Notify the transport company immediately of any damage.
- Contact your transport insurance carrier immediately.
- Safeguard the machine and accessories from further damage.

✓ Damage situation has been recorded and reported.

6.3 Transporting the machine

WARNING!

Use of unsuitable fork lifts.

Non-observance could result in serious personal injury or property damage.

- When selecting a fork lift, observe the relevant data such as load-bearing capacity, load center of gravity, width of forklift carrier and length of forks.
- For details about the minimum requirements, please see the "Technical data" chapter.

1 Machine

Illustration 26: Transporting the machine

Procedure:

1) Use a suitable fork lift. (For requirements, see chapter “3.2.4 Shipping and transport data”).
2) Lift the shipping pallet with the machine only as far as absolutely necessary for the transport.
3) Transport the shipping pallet as close as possible to the intended location.
4) Set the shipping pallet down carefully.

✓ The machine is at its final destination.

6.4 Interim storage of the machine

WARNING!
Incorrect storage.
Non-observance could result in severe property damage.
Observe the specified storage conditions.

6.4.1 Outdoors

- The machine may be stored temporarily outdoors for a maximum of 2 weeks with the shipment packaging intact.
- In addition, the machine must be protected from moisture by a roof or suitable tarpaulin.
- As soon as condensation forms, the machine must be stored in an indoor storage area (risk of corrosion).
- When doing so, the protective sheet should be detached from the pallet and lifted slightly so that the air can circulate.

6.4.2 Storage space

- See chapter “3.2.6 Ambient conditions”.

7 Set-up, commissioning

7.1 Introduction

7.1.1 Qualification of personnel

This table lists the necessary qualification of the personnel related to "Set-up and commissioning" of the machine.

	Specially trained personnel	Instructed operating personnel	Instructed personnel with specialized training (mechanical/ electrical engineering)
Set-up	-	-	X
Electrical connections	-	-	X
Electrical supply	-	-	X
Commissioning	-	-	X

Table 23: Qualification of personnel; Set-up, commissioning
Legend: X permitted, - not permitted

7.1.2 Safety instructions

CAUTION!

Incorrect supply voltage.

Non-observance could result in severe property damage.

- If the existing rated voltage deviates from the details on the name plate, wiring diagram, and "technical data" in the operating manual, an isolating transformer must be used.
- You can get the necessary information from the manufacturer.

WARNING!

Use of unsuitable fork lifts.

Non-observance could result in serious injury or death.

- When selecting a fork lift, observe the relevant data such as load-bearing capacity, load center of gravity, width of forklift carrier and length of forks.
- For details about the minimum requirements, please see the "Technical data" chapter.

WARNING!

Tipping machine parts while unloading and installing the machine.

Non-observance could result in serious personal injury or property damage.

- Use a fork lift for transportation.
- Use webbing slings as the lifting equipment.
- No people may linger in the unloading area.

WARNING!

Insufficient properties and condition of the underfloor.

Non-observance could result in serious personal injury or property damage.

Check the properties and condition and load rating of the subsurface in the set-up location.

For necessary minimum requirements, please see the "Technical data" chapter.

7.2 Brief instructions

The machine is set up and put into operation in these work steps:

- Set up the machine.

  See chapter “7.3 Setting up the machine”
- Remove rust preventing agents.

  See chapter “7.4 Removing rust preventing agents”
- Carry out the electrical connections.

  See chapter “7.5 Electrical connection”
- Carry out commissioning.

  See chapter “7.6 Commissioning”
- Carry out inspection following initial commissioning.

  See chapter “7.8 Inspection after initial operation”

7.3 Setting up the machine

WARNING!

Tipping machine parts while unloading and installing the machine.

Non-observance could result in serious personal injury or property damage.

- Use a fork lift for transportation.
- Use transport tapes as the lifting equipment.
- No people may linger in the unloading area.

1 Locking screws 2 Guide rollers	3 Screws

Illustration 27: Setting up the machine

Procedure:

1) Remove the packaging material.
2) Dispose of the packaging material in an environmentally-friendly fashion.
3) Remove the fastening screws (3) of the machine to the transport pallet.
4) Unfasten the locking screws (1) until they are higher than the guide rollers (2).
5) Raise the machine using webbing slings and a fork lift from the transport pallet.
6) Carefully remove the machine.

   Take care not to damage the casters(2) in the process.
7) Transport the machine carefully to the relevant site.

✓ Machine is at the final destination.

7.3.1 Completing the machine

The Z folding unit is supplied assembled.
No assembly work is required.

7.4 Removing rust preventing agents

After setting up the machine, thoroughly clean rust preventing agents from all machine parts.

In this process, observe the cleaning agent recommendation in the table below as well as the detailed information on the "Varn" roller cleaner in the "Cleaning" chapter.

Machine part	Cleaning agent
Painted surfaces	Solvent-free cleansing agent
Fold rollers	"Varn-Wash VM 111" See also Cleaning chapter.
Unpainted plates	Degreaser of choice

Table 24: Cleaning recommendation

7.5 Electrical connection

DANGER!

Hazardous voltage.

Non-observance will result in serious injury or death.

- Only an electrically qualified person may perform work on the machine's electrical system.
- Follow the local occupational safety regulations and electrotechnical regulations.
- There is hazardous residual voltage on the connection terminals of the frequency inverter even when the main switch is switched off. (heed capacitor discharge time).

7.5.1 Network prerequisites

CAUTION!

Incorrect supply voltage.

Non-observance could result in severe property damage.

- If the existing rated voltage deviates from the details on the name plate, wiring diagram, and "technical data" in the operating manual, an isolating transformer must be used.
- You can get the necessary information from the manufacturer.

Illustration 28: Name plate

Observe the following network prerequisites.

- A TN-S power system or TN-C-S power system is mandatory as the power supply system.
- The voltage, frequency, network cross-section, and mains protection must match the details on the name plate (1), wiring diagram, and "Technical data" in the operating manual.
- The N conductor is loaded.
- It is not permitted to use any ground fault circuit interrupter (GFCI) or voltage fluctuation relay. (Problems with radio frequency interference filters, EMC)

- A clockwise rotating field is absolutely essential.

See chapter “3.2.5 Electrical supply”

7.5.2 Electrical connections between the folding units

See chapter “5.2 Operating modes”

7.6 Commissioning

DANGER!

Hazardous voltage.

Non-observance will result in serious injury or death.

- Only an electrically qualified person may perform work on the machine's electrical system.
- Follow the local occupational safety regulations and electrotechnical regulations.
- There is hazardous residual voltage on the connection terminals of the frequency inverter even when the main switch is switched off. (heed capacitor discharge time).

7.6.1 Brief instructions

- Check the supply voltage.
  See chapter “7.6.2 Check the supply voltage”.
- Check the control cabinet cover.
  See chapter “7.6.3 Checking the control cabinet cover”
- Check the machine functions.
  See chapter “7.6.4 Checking the machine functions”
- Final check of the protective devices.
  See chapter “7.7 Final check of the protective devices”.
- Inspection after initial operation.
  See chapter “7.8 Inspection after initial operation”.

7.6.2 Check the supply voltage

CAUTION!

Incorrect supply voltage.

Non-observance could result in severe property damage.

- If the existing rated voltage deviates from the details on the name plate, wiring diagram, and "technical data" in the operating manual, an isolating transformer must be used.
- You can get the necessary information from the manufacturer.

Procedure:

▷ First check that the correct supply voltage is available.

See chapter “7.5.1 Network prerequisites”.
See chapter “3.2.5 Electrical supply”.

▷ Only then should the power plug be plugged into the previous folding unit.

7.6.3 Checking the control cabinet cover

Check that the covers on all control cabinets are grounded and closed.

Procedure:

▷ Check this by visual inspection.

7.6.4 Checking the machine functions

Procedure:

▷ Check the entire scope of machine functions by setting up a customer job/test job.

7.7 Final check of the protective devices

After assembling the machine, be absolutely certain to carry out a final check of the protective devices.

Procedure:

▷ Check that all covers and safety and protective devices are installed and fully functional.

For this purpose, use the checklist for the safety and protective devices.

See chapter “4.6.8 Check list for safety and protective devices”.

✓ Final check is complete.

7.8 Inspection after initial operation

20 operating hours after initial operation, it is necessary to perform an inspection of all belts and tapes.

Procedure:

▷ Check the tapes and belts for correct centric running and the correct tension.

If required, readjust these.

See Maintenance/Maintenance Schedule chapter.

✓ Inspection is complete.

8 Adjustment and operation

8.1 Introduction

For the operation of the machine, also observe:

- The safety instructions.
  See chapter “8.1.2 Safety instructions”.
- Safety and protective devices
  See chapter “4.6.8 Check list for safety and protective devices”.
- The intended use.
  See chapter “2.1 Intended use”.
- Qualification and training of the operating personnel.
  See chapter “8.1.1 Qualification of personnel”.

8.1.1 Qualification of personnel

This table lists the necessary qualification of the personnel related to "Adjustment and operation" of the machine.

	Specially trained personnel	**Instructed operating personnel**	**Instructed personnel with specialized training (mechanical/ electrical engineering)**
Operation	X	X	-
Adjustment	X	X	-

Table 25: Qualification of personnel, adjustment and operation
Legend: X permitted, - not permitted

8.1.2 Safety instructions

WARNING!

Dismantling, bridging or bypassing safety and protective devices.

Non-observance could result in serious injury or death.

- No safety or protective devices of the machine may be dismantled, bridged or bypassed.
- Using the check list for safety and protective devices, check that all protective devices are on the machine.
- Report any audible / visible safety-relevant change of the machine to the person at your operation responsible for the system.

WARNING!

Rotating machine parts.

Non-observance could result in serious injury or death.

- Make sure that you always tie back your hair and keep it protected.
- Remove your jewelry during operation and maintenance of the machine.
- Make sure of wearing only close fitting clothes while you operate or maintain the machine.

WARNING!

Rotating machine parts.

Non-observance could result in serious injury or death.

In case of a sudden standstill of the machine, check before switching on again:

- That there are no other people on the machine.
- That the machine is in perfect condition.

WARNING!

Incorrect handling of the safety handwheels.

Non-observance could result in serious injury or death.

- Turn the safety handwheel only when the machine is not moving.
- Press the EMERGENCY STOP palm button.
- Operate the machine with safety handwheels only (otherwise, there is a hazard of being drawn in).

WARNING!

Unjamming of paper jams.

Paper jams can block the drive and it can start up again unexpectedly when the jam is cleared.

Non-observance could result in serious injury or death.

- Dejamming work may only be done on a machine that is switched off and secured against switching on again.
- When removing the paper jam, turn the machine using the safety handwheel only.
- Only start the machine again after completely removing the paper jam, since otherwise there can be property damage to drive belts, transport belts, fold rollers, etc.

CAUTION!

High sound pressure level.

Non-observance could result in hearing damage.

- Always wear ear protection when working on the machine.
- Always close the noise damping hoods when you work on the machine.

8.2 Operation

8.2.1 EMERGENCY STOP palm button

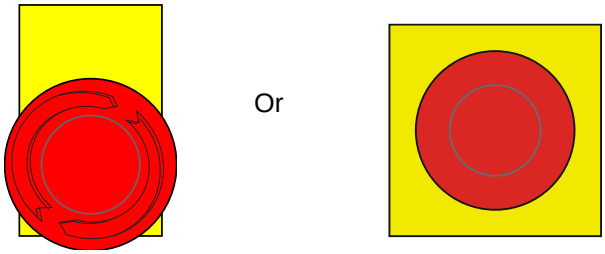

1 EMERGENCY STOP palm button

Illustration 29: EMERGENCY STOP palm button

To prevent immediate or potential hazards, the machine is equipped with an EMERGENCY STOP shut-off device.
After the <EMERGENCY STOP> palm button is pressed, all electrical drives are switched off.
EMERGENCY STOP does not disconnect the machine from the electrical supply.

The machine is in operation.
There is a hazardous situation and the machine must be stopped quickly.

Procedure:

▷ Press the EMERGENCY STOP palm button.
▷ Eliminate the failure.
▷ Disengage the EMERGENCY STOP palm button by turning it towards the right.

✓ The machine is ready for operation.

When the EMERGENCY STOP palm button is pressed, the machine is stopped immediately.
No emptying of the sheets takes place!

8.2.2 MC-Control

8.2.2.1 Control panel

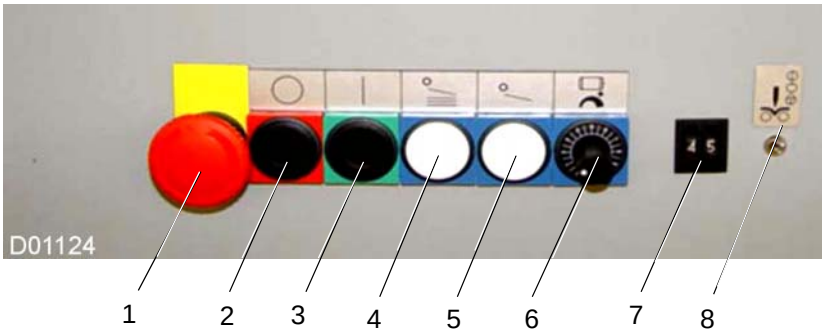

Illustration 30: Control panel

1 Palm button <EMERGENCY STOP>
2 <Machine stop> button
3 <Machine start> button
4 <Sheet infeed, production> button
5 <Sheet infeed, single sheet> button
6 <Speed> potentiometer
7 Decade switch (folding knife actuation)
8 Toggle switch (folding knife control)
Top position = production
Center position = off
Bottom position = single stroke

8.2.2.2 Starting/stopping the machine

Starting the machine

Procedure:

▷ Press the <Machine start> button.

✓ The individual units are started sequentially, beginning at the delivery system.

Stopping the machine

Procedure:

▷ Press the <Machine stop> button.

✓ The machine is stopped.

The entire machine network is stopped immediately when the <Machine stop> button is pressed.

8.2.2.3 Starting/stopping the sheet infeed

To recall single sheets

Procedure:
▷ Press the <Sheet feed single sheet> button.
✓ A single sheet is fed in.

Starting production

Procedure:
▷ Press the <Sheet feed, production> button.
✓ Sheets are fed continuously.

Stopping production

Procedure:
▷ Press the <Sheet feed, production> button again.
✓ The sheet infeed stops.

8.2.2.4 Adjusting the speed

Changing the speed affects a local speed change, i.e. the sheet gap is changed locally.

Increasing the speed

Procedure:
▷ Turn the <Speed> potentiometer clockwise.
✓ The speed is increased locally.

Reducing the speed

Procedure:
▷ Turn the <Speed> potentiometer counterclockwise.
✓ The speed is reduced locally.

The speed for the entire machine combination must be set locally on each unit.

The speed should be adjusted, according to the product and sheet production speed, so that:
- No greater sheet gap is produced,
- The sheets are not overlapping.

8.2.2.5 Adjusting the folding knife control

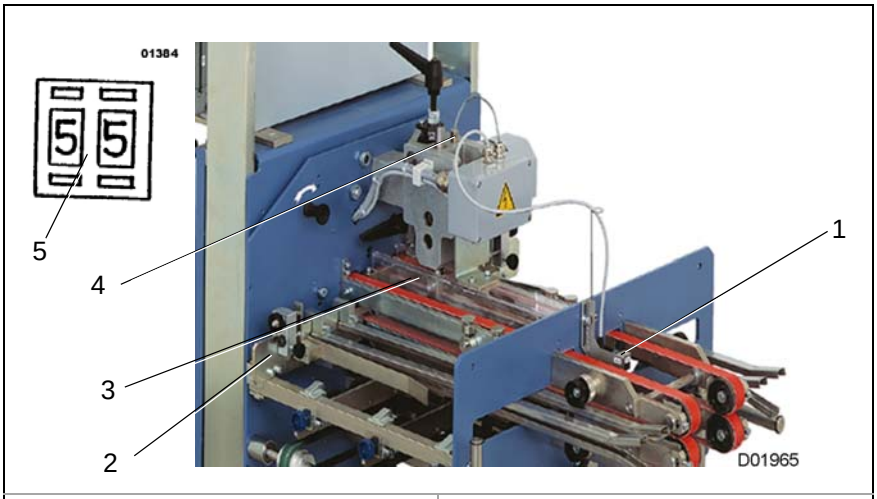

1 Photoelectric sensor 2 Sheet stop 3 Folding knife	4 Inductive sensor 5 Decade switch

Illustration 31: Folding knife control

Functional description

- The folding knife actuation is activated by the photoelectric sensor (1) on the folding unit infeed.
- There is a fixed distance of 43 cm between the photoelectric sensor (1) and sheet stop (2).

  The minimum value to be entered on the decade switch (5) amounts 43 cm.
- Once the sheet has covered a distance of 43 cm, the folding knife (3) moves downwards.

  The level out time of the sheets on the sheet stop amounts 0 cm.
- The folding knife movement is stopped back in the top position by the inductive sensor (4).

Increasing the level out time

Procedure:

▷ Increase the input value of the decade switch with the desired level out time.

For fourfold work the practical values are approx. 50-60 cm.

At very high level out times, there may be a collision of the subsequent sheet with the folding knife or with the outgoing sheet.
Remedy:
- Reduce the level out time (if possible).
- Increase the folding unit speed slightly (if possible).
- Reduce the folding machine speed slightly.
- Increase the sheet gap on the feeder.

8.2.2.6 Adjusting the folding knife control

Adjusting the toggle switch

The toggle switch has 3 switching positions.

- Top position:
  Production
- Center position:
  The folding knife is switched off.
  Required to stop a sheet underneath the folding knife during setup.
- Bottom position:
  Single stroke actuation of the folding knife.
  A single folding knife movement is actuated by briefly tapping downwards and then switching upwards.

The toggle switch is only permitted to be switched downwards very briefly as otherwise the folding unit will stop.

8.2.2.7 Displaying/resetting an error message

Displaying an error message

An error message is displayed on the MC-control of folding unit I.

Correcting the cause of the fault

Procedure:

▷ Correct the cause of the fault.

Resetting an error message

Procedure:

▷ Press the <Machine stop> button.
The error message on the MC-control of folding unit I goes out.

✓ The machine is ready for operation.

8.2.3 NAVIGATOR-Control (NC-Light)

8.2.3.1 Complete operating terminal

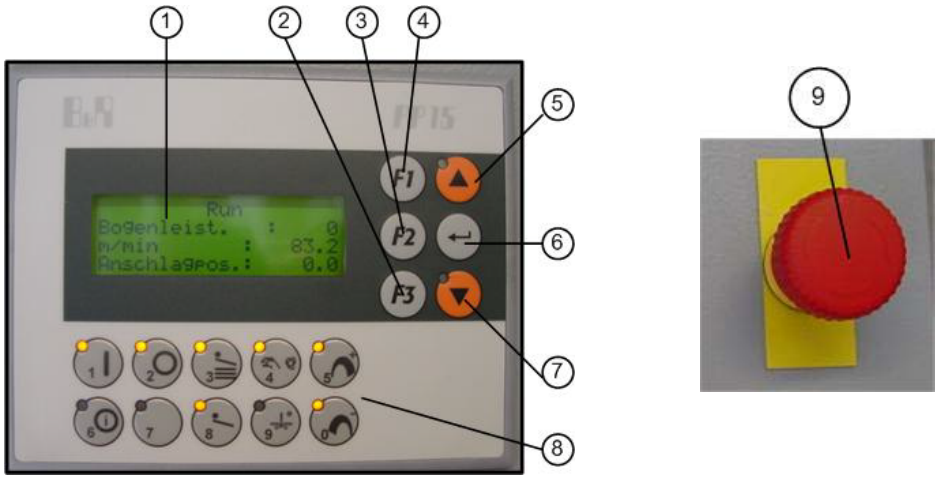

Illustration 32: Control panel Navigator-Control

1 LC-Display 4 x 20 characters 2 Function key F3 menu group "Service" 3 Function key F2 menu group "Parameters" 4 Function key F1 menu group "Run"	
Machine control	**Numeric input**
5 Scroll button/change direction. 6 Operating mode button (Enter) 7 Scroll button/change direction. 8 Keypad 9 Palm button EMERGENCY STOP	Move cursor to the next input field. Input mode, value transfer Move cursor to the next input field.

8.2.3.2 Keypad

All buttons have a double function (machine control/numeric input).

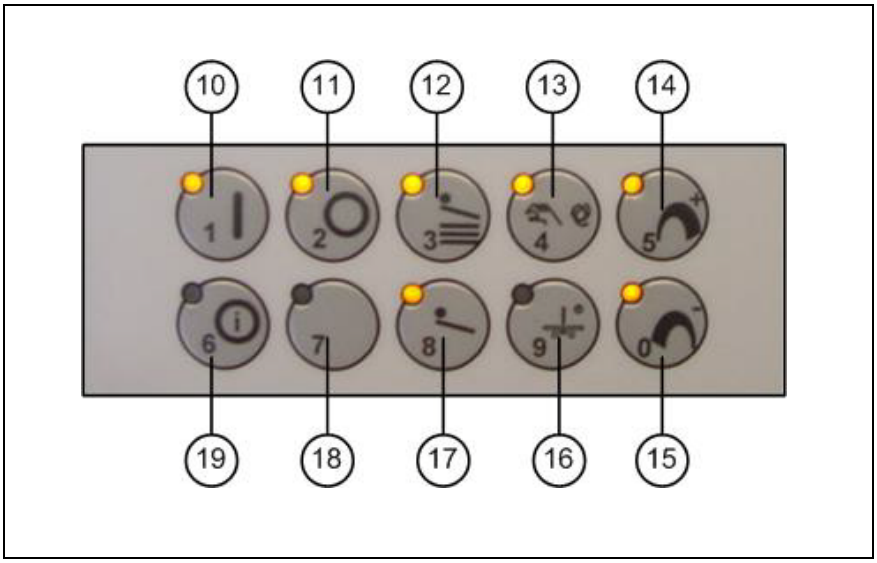

Illustration 33: Keypad

Machine control	Numeric input
10. Machine start	1
11. Machine stop	2
12. Sheet infeed, production	3
13. Knife actuation: Automatic/manual actuation	4
14. Value change **+**	5
15. Value change **-**	0
16. Folding knife manual actuation	9
17. Sheet infeed, single sheet	8
18. Not assigned	7
19. Delete errors.	6

The operation of the NC-Light control is described in a separate operating manual.

8.2.4 VARIO-Control

8.2.4.1 Control panel

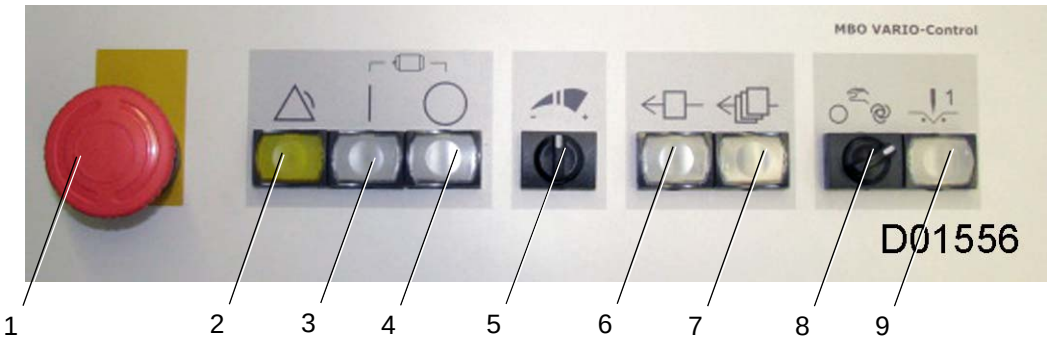

Illustration 34: Control panel VARIO-Control

1 Palm button <EMERGENCY STOP>
2 <Error message/quality control> illuminated push button
3 <Machine start> button
4 <Machine stop> button
5 <Speed> selector button
6 <Sheet infeed, single sheet> button
7 <Sheet infeed, production> button
8 <Manual/automatic folding knife actuation> selector switch
9 <Folding knife actuation single stroke> button

8.2.4.2 Starting/stopping the machine

Starting the machine

Procedure:

▷ Press the <Machine start> button.

✓ The individual units are started sequentially, beginning at the delivery system.

Stopping the machine

Procedure:

▷ Press the <Machine stop> button.

✓ The machine is stopped.

The sheet infeed is only stopped when the machine is stopped using the <Machine stop> button.
The machine only stops once the sheets run empty!

8.2.4.3 Starting/stopping the sheet infeed

When the sheet infeed is switched on, the air supply is started automatically.

To recall single sheets

Procedure:
▷ Press the <Sheet infeed single sheet> button.
✓ A single sheet is fed in.

Starting production

Procedure:
▷ Press the <Sheet infeed, production> button.
✓ Sheets are fed continuously.

Stopping production

Procedure:
▷ Press the <Sheet infeed, production> button again.
✓ The sheet infeed stops.

8.2.4.4 Changing the speed

Changing the speed affects a local speed change, i.e. the sheet gap is changed locally.
The production speed remains the same.

Increasing the speed

Procedure:
▷ Move the <Speed> selector switch to the right (+).
✓ The speed is increased locally.

Reducing the speed

Procedure:
▷ Move the <Speed> selector switch to the left (-).
✓ The speed can be reduced down to the calculated value.

Speed setting on all folding units

The speed setting for all folding units is carried out via the TOUCHSCREEN on folding unit I, by entering a new sheet production speed.

- The speed is set when the machine is calibrated.
- The speed can only be increased locally.
- Reducing the speed is only possible locally down to the calculated value from the sheet production speed.

8.2.4.5 Adjusting the folding knife control

- The actuation time for the folding knife is calculated automatically.
- The actuation point is changed on the touchscreen of folding unit I.

Folding knife actuation for production

Procedure:

▷ Switch the <Manual/automatic folding knife actuation> to the left.

✓ The folding knife is actuated automatically for each sheet.

Switching off the folding knife

Procedure:

▷ Switch the <Manual/automatic folding knife actuation> to the center.

✓ The folding knife is switched off.

Folding knife actuation for single stroke

Procedure:

▷ Switch the <Folding knife actuation manual/automatic> to the right.

▷ Press the <Folding knife actuation single stroke> button.

✓ A single stroke of the folding knife is actuated.

8.2.4.6 Displaying/resetting an error message

The <Error message/quality control> illuminated push button has a triple function:

- <Display error message>.
- <Reset error message>.
- <Quality control>, see chapter “8.2.4.7 Quality control”.

Error message

If there is an error message, the <Error message/quality control> illuminated push button will be yellow.
The error is displayed on the TOUCHSCREEN of folding unit I as text.

Correcting the cause of the fault

Procedure:

▷ Correct the cause of the fault.

Resetting an error message

Procedure:

▷ Press the <Error message/quality control> illuminated push button.
The error message goes out.

✓ The machine is ready for operation.

8.2.4.7 Quality control

The <Error message/quality control> illuminated push button has a triple function:
- <Display error message>,
- <Reset error message>,
- <Quality control>.

The <Quality control> function is used for the safe removal of sheets to be able to check them. Subsequent folding units can be paused individually to do this.

The <Quality control> is always switched on locally on the folding unit on which the sheet is to be removed.

The only exception is folding unit I.
If the <Quality control> is switched on there, folding unit II remains stationary.

Switching on

Procedure:

▷ Press the <Error message/quality control> illuminated push button.

The <Error message/quality control> illuminated push button flashes in yellow.

▷ Start the machine.

Folding unit I is running, folding unit II is stationary.

▷ Start the sheet infeed as single sheet/production.

✓ The quality control is switched on.

Switching off

Procedure:

▷ Press the <Error message/quality control> illuminated push button again.

The <Error message/quality control> illuminated push button stops flashing.

✓ The quality control is switched off.

8.2.5 M1-Control, Basic

8.2.5.1 Control panel

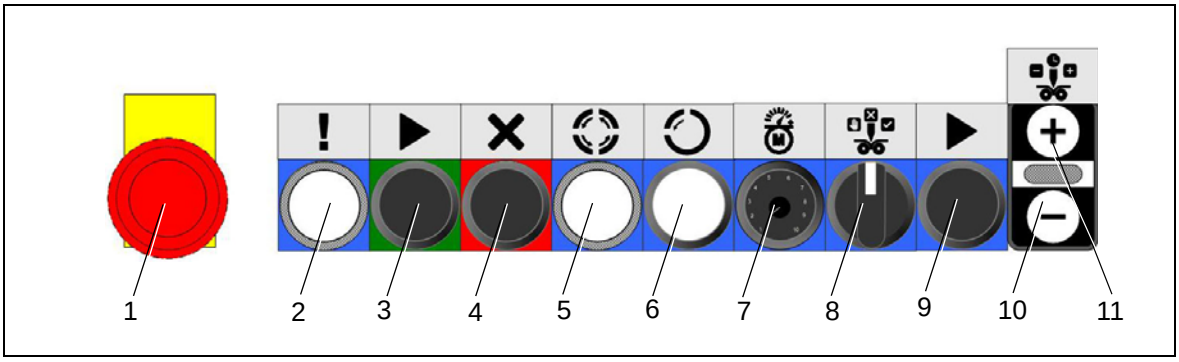

Illustration 35: Control panel M1-Control, Basic

1 Palm button <EMERGENCY STOP>
2 <Error message> illuminated push button
3 <Machine start> button
4 <Machine stop> button
5 <Sheet infeed, production> button
6 <Sheet infeed, single sheet> button
7 <Speed> potentiometer
8 <Folding knife actuation> selector switch
Left position = manual
Center position = off
Right position = production
9 <Single stroke, folding knife> button.
10 <Folding knife actuation +> button
11 <Folding knife actuation -> button

8.2.5.2 Starting/stopping the machine

Starting the machine

Procedure:

▷ Press the <Machine start> button.

✓ The individual units are started sequentially, beginning at the delivery system.

Stopping the machine

Procedure:

▷ Press the <Machine stop> button.

✓ The machine is stopped immediately.
No emptying of the sheets takes place.

Machine soft stop (Advanced only)

Procedure:

▷ Press the <Machine soft stop> button.
The sheet infeed is stopped immediately.
The machine only stops once the sheets run empty!

✓ The soft stop has been carried out.

8.2.5.3 Starting/stopping the sheet infeed

When the sheet infeed is switched on, the air supply is started automatically.

To recall single sheets

Procedure:
▷ Press the <Sheet infeed single sheet> button.
✓ A single sheet is fed in.

Starting production

Procedure:
▷ Press the <Sheet infeed, production> button.
✓ Sheets are fed continuously.

Stopping production

Procedure:
▷ Press the <Sheet infeed, production> button again.
✓ The sheet infeed stops.

8.2.5.4 Changing the speed

Changing the speed affects a local speed change, i.e. the sheet gap is changed locally.

Increasing the speed

Procedure:
▷ Turn the <Speed> potentiometer to the right (+).
✓ The speed is increased locally.

Reducing the speed

Procedure:
▷ Turn the <Speed> potentiometer to the right (-).
✓ The speed is reduced locally.

The speed for the entire machine combination must be set locally on each unit.

The speed should be adjusted, according to the product and sheet production speed, so that:
- No greater sheet gap is produced,
- The sheets are not overlapping.

8.2.5.5 Adjusting the folding knife control

The actuation time for the folding knife is calculated automatically.

Folding knife actuation, production

Procedure:
▷ Switch the <Folding knife actuation> selector switch to the right.
✓ The folding knife is actuated automatically for each sheet.

Switching off the folding knife

Procedure:
▷ Switch the <Folding knife actuation> to the center.
✓ The folding knife is switched off.

Folding knife actuation, single stroke

Procedure:
▷ Switch the <Folding knife actuation> selector switch to the left.
▷ Press the <Single stroke, folding knife> button.
✓ A single stroke of the folding knife is actuated.

Folding knife actuation, later

Procedure:
▷ Press the <Folding knife actuation +> button.
The folding knife actuation is initiated one cm later per press.
✓ The folding knife is actuated later than calculated.

Folding knife actuation, earlier

Procedure:
▷ Press the <Folding knife actuation -> button.
The folding knife actuation is initiated one cm earlier per press.
✓ The folding knife is actuated earlier than calculated.

8.2.5.6 Displaying/resetting an error message

Error message

If there is an error message, the <Error message> illuminated push button will be yellow
The error is displayed on the TOUCHSCREEN of folding unit I as text.

Correcting the cause of the fault

Procedure:
▷ Correct the cause of the fault.

Resetting an error message

Procedure:
▷ Press the <Error message> illuminated push button.
The error message goes out.
✓ The machine is ready for operation.

8.2.6 M1-Control, Advanced

8.2.6.1 Control panel

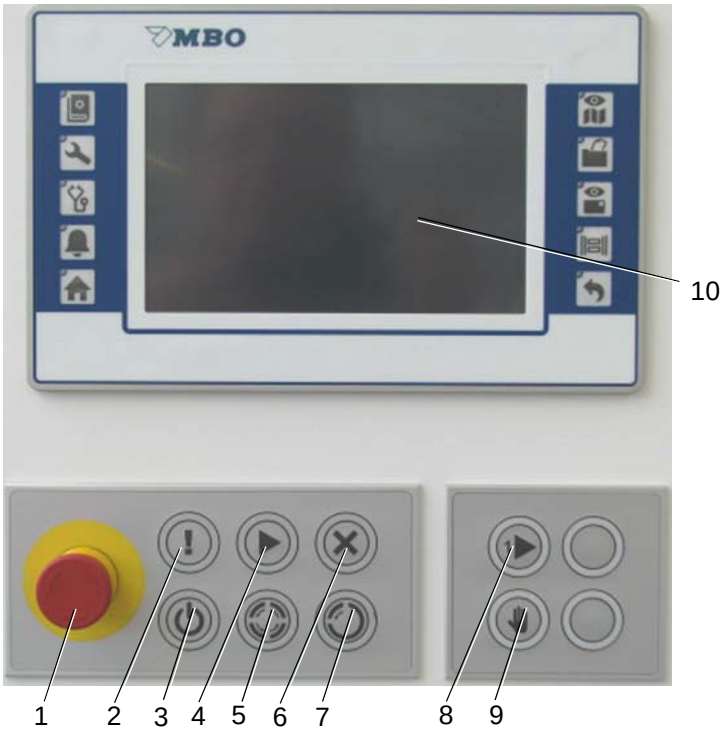

Illustration 36: Control panel M1-Control, Advanced

1 Palm button <EMERGENCY STOP>
2 <Error message> button
See chapter “8.2.6.3 Displaying/resetting an error message”
3 <Machine soft stop> button
See chapter “8.2.5.2 Starting/stopping the machine”
4 <Machine start> button
See chapter “8.2.5.2 Starting/stopping the machine”
5 <Sheet infeed, production> button
See chapter “8.2.5.3 Starting/stopping the sheet infeed”
6 <Machine stop> button
See chapter “8.2.5.2 Starting/stopping the machine”
7 <Sheet infeed, single sheet> button
See chapter “8.2.5.3 Starting/stopping the sheet infeed”
8 <Folding knife on/off> button
See chapter “8.2.6.2 Adjusting the folding knife control”
9 <Single stroke, folding knife> button
See chapter “8.2.6.2 Adjusting the folding knife control”
10 Touchscreen
The operation of the touchscreen is identical to folding unit I and is described in the operating manual for folding unit I.

8.2.6.2 Adjusting the folding knife control

- The actuation time for the folding knife is calculated automatically.
- The actuation point is changed on the touchscreen.

Switching on the folding knife

Procedure:

▷ Press the <Folding knife on/off> button.
The button lights up green.

✓ The folding knife is actuated automatically for each sheet.

Switching off the folding knife

Procedure:

▷ Press the <Folding knife on/off> button again.
▷ The button is not lit up.

✓ The folding knife is switched off.

Actuation single stroke, switching on

Procedure:

▷ Press the <Folding knife on/off> button.
The button lights up green.
▷ Press the <Single stroke, folding knife> button (9).
The color of the button (8) changes from green to yellow.
The button (9) flashes yellow.
Each press of the button (9) actuates a single stroke

✓ Actuation single stroke is switched on.

Actuation single stroke, switching off

Procedure:

▷ Press the <Folding knife on/off> (8) button.
The color of the button (8) changes from yellow to green.
The button (9) stops flashing.

✓ Actuation single stroke is switched off.

8.2.6.3 Displaying/resetting an error message

Error message

If there is an error message, the <Error message> illuminated push button will be yellow
The error is displayed on the TOUCHSCREEN as text.

Correcting the cause of the fault

Procedure:

▷ Correct the cause of the fault.

Resetting an error message

Procedure:

▷ Press the <Error message> button.
The error message goes out.

✓ The machine is ready for operation.

8.3 Adjustment

8.3.1 Brief instructions

- Position the knife folding unit.
  “8.3.2 Positioning the folding unit”.
- Set the infeed height.
  “8.3.3 Setting the infeed height”
- Set the sheet infeed.
  “8.3.4 Adjusting the sheet infeed”.
- Adjust the fold rollers.
  “8.3.5 Adjusting fold rollers”.
- Adjust the folding knife.
  “8.3.6 Adjusting the folding knife”.
- Adjust the sheet outfeed.
  “8.3.7 Adjusting the sheet outfeed”
- Swivel the knife unit.
  “8.3.8 Swiveling the knife unit, Z 2 only”

8.3.2 Positioning the folding unit

8.3.2.1 Z 2

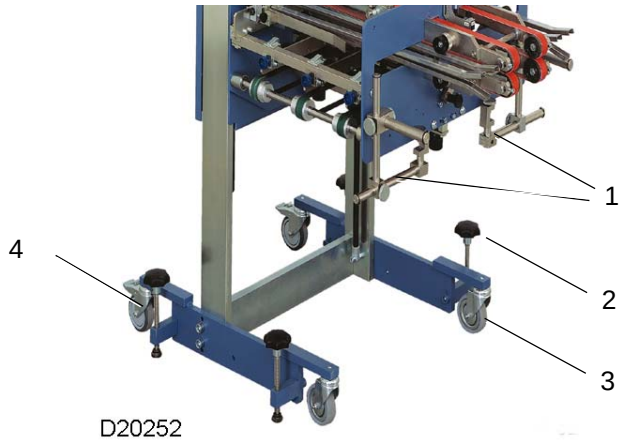

1 Connection elements 2 Locking screws	3 Swivel casters 4 Swivel casters with brake

Position the folding unit at the outlet of the folding machine according to the fold type and paper format.

Positioning

Procedure:

▷ Set the folding unit at the outlet of the folding machine.

Ensure that the folding unit center and the center or folding line of the sheet being folded match up.

Fixing

Procedure:

▷ Fix the position by setting the brake on the swivel casters (4).

▷ Raise the folding unit using the locking screws (2) until the swivel casters (3 and 4) are free.

▷ Fasten the connection elements (1) on the previous folding unit.

✓ The folding unit is fixed.

8.3.2.2 Z 6

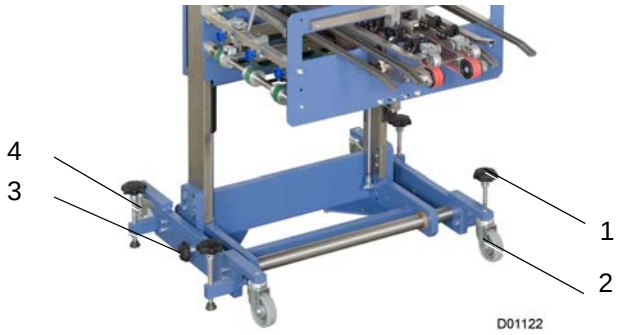

1 Locking screws 2 Swivel casters	3 Adjusting screw 4 Swivel casters with brake

Position the folding unit at the outlet of the folding machine according to the fold type and paper format.

Positioning

Procedure:

▷ Set the folding unit at the outlet of the folding machine.

Ensure that the folding unit center and the center or folding line of the sheet being folded match up.
Slight deviations can be corrected afterwards using the adjusting screw (3).

Fixing

Procedure:

▷ Fix the position by setting the on the swivel casters (4).
▷ Raise the folding unit using the locking screws (1) until the swivel casters (2 and 4) are free.
▷ Fasten the connection elements (1) on the previous folding unit.
✓ The folding unit is fixed.

Lateral precise adjustment

Procedure:

▷ Make the precise adjustment using the adjusting screw (3).

Turning clockwise = folding unit moves in the direction of the operator side.

Turning counterclockwise = folding unit moves in the direction of the drive side.

✓ Precise adjustment is adjusted.

8.3.3 Setting the infeed height

1 Knurled screws

Illustration 37: Setting the infeed height

The infeed belts on the folding unit must be adjusted to the exit height of the previous folding unit.

Procedure:

▷ Loosen the knurled screws (1).
▷ Adjust the infeed height of the transport belts by raising or pushing downwards the folding unit frame in line with the exit height of the previous folding unit.
▷ Tighten the knurled screws (1) on both sides.

✓ The infeed height is adjusted.

8.3.4 Adjusting the sheet infeed

8.3.4.1 Z 2

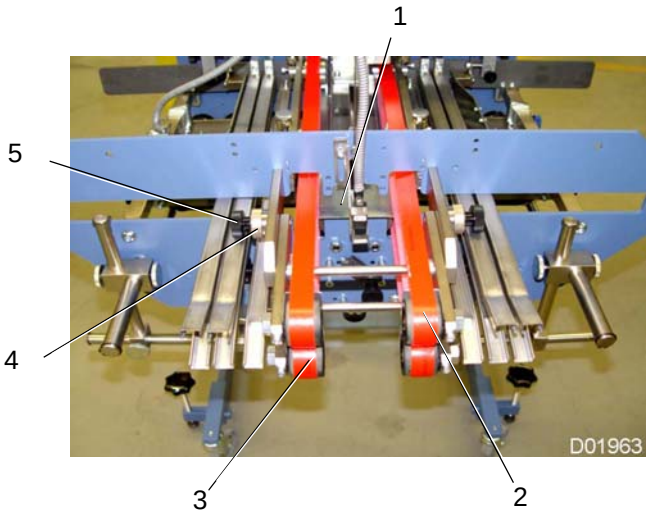

1 Guide plate 2 Top transport belt 3 Bottom transport belt	4 Eccentric 5 Knurled screw

Illustration 38: Z 2 sheet infeed

The factory setting for the transport belts should not be changed.

"Inner width" factory setting

An incorrect setting of the transport belt results in the following impairments:

- If the transport belt is set too high, the infeed product thickness is limited.
- If the transport belt is set too low, it will rub against the guide plate and may become damaged.

Procedure:

1) Unfasten the knurled screw (5).
2) Adjust the transport belt (2) by turning on the eccentric (4) so that it runs parallel to the top edge of the guide plate (1).
3) Tighten the knurled screw (5).

✓ The "inner width" is adjusted.

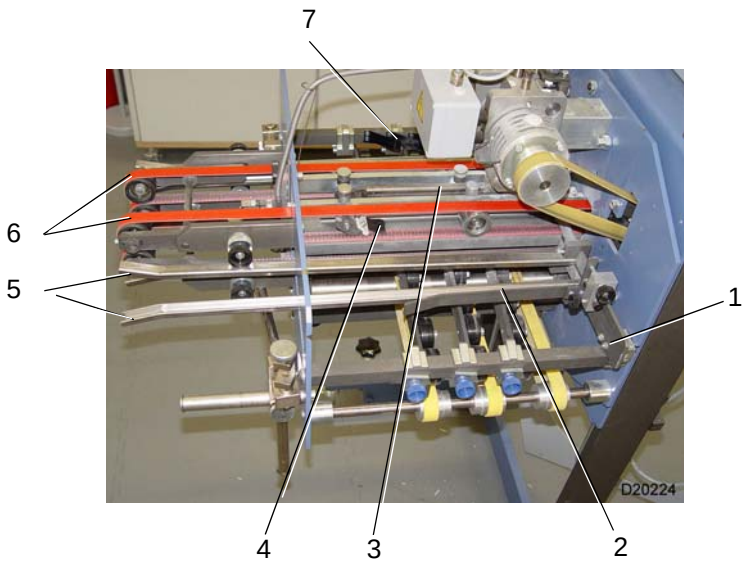

1 Sheet stop 2 Side stop - fixed 3 Folding knife 4 Brush	5 Guide rails 6 Transport tapes 7 Side stop - with spring

Illustration 39: Z 2 sheet infeed

Procedure:

Positioning the brushes

▷ Position the brushes (4) on the rear edge of the sheet so that the sheets do not spring back from the sheet stop (1).

Adjusting the side stops

▷ Set the side stop - fixed (2) so that the sheets run into it as precisely as possible.
▷ Set the side stop - with spring (7) so that the sheets are pressed gently against the side stop - fixed (2).

Inserting the guide rails

▷ Set the guide rails (5) below and above the sheets so that the sheets are positioned exactly horizontally underneath the folding knife (3) and cannot escape upwards or drop downwards.

Re-adjusting the side stops

▷ If the sheet is not folded at the precise point required, both side stops must be checked and re-adjusted using the precise adjustment.

Ensure that the sheet is still running in on the fixed stop precisely after adjusting the side stops.
This can be corrected afterwards via lateral offsetting of the complete folding unit. Unfasten the connection elements to the folding machine to do this.

8.3.4.2 Z 6

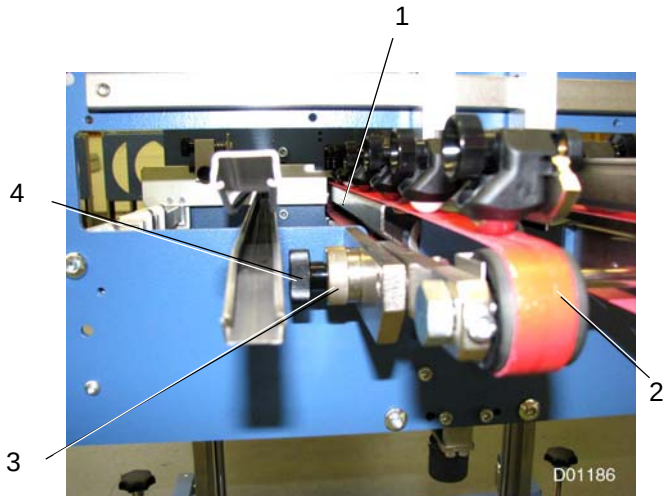

1 Guide plate 2 Bottom transport belt	3 Eccentric 4 Knurled screw

Illustration 40: Z 6 sheet infeed

The factory setting for the transport belts should not be changed.

"Inner width" factory setting

An incorrect setting of the transport belt results in the following impairments:

- If the transport belt is set too high, the infeed product thickness is limited.
- If the transport belt is set too low, it will rub against the guide plate and may become damaged.

Procedure:

1) Unfasten the knurled screw (4).
2) Adjust the transport belt (2) by turning on the eccentric (3) so that it runs parallel to the top edge of the guide plate (1).
3) Tighten the knurled screw (4).

✓ The "inner width is adjusted.

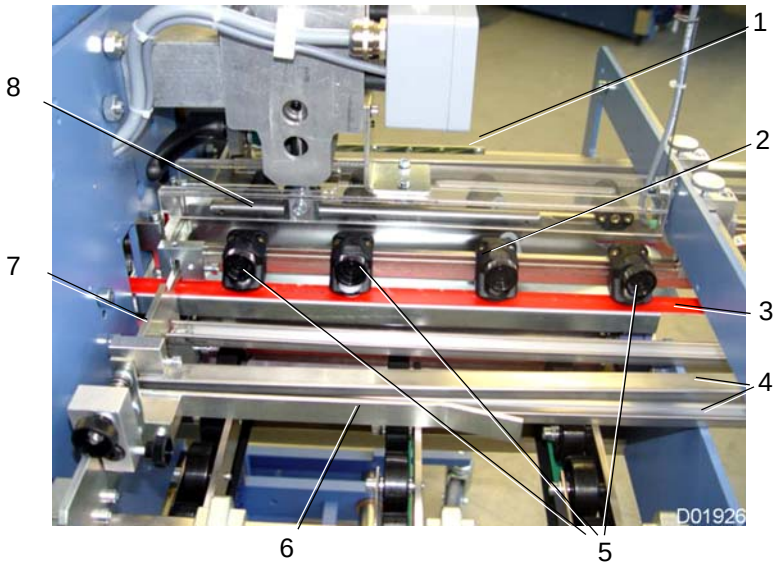

1	Side stop - with spring	5	Ball holder
2	Ball holder with brush	6	Side stop - fixed
3	Transport tapes	7	Sheet stop
4	Guide rails	8	Folding knife

Illustration 41: Z 6 sheet infeed

Procedure:

Positioning the transport balls

▷ Unfasten the knurled screws on the ball holder (5).
▷ Position the ball holders (5) according to the sheet format.
▷ Tighten the knurled screws on the ball holder (5).

Adjust the number, position and material (plastic or steel balls) to the product being processed and the working speed.

Positioning the brushes

▷ Position the ball holder with brush (2) on the rear edge of the sheet so that the sheets do not spring back from the sheet stop (7).

Adjusting the side stops

▷ Set the side stop - fixed (6) so that the sheets run into it as precisely as possible.
▷ Set the side stop - with spring (1) so that the sheets are pressed gently against the side stop - fixed (6).

Inserting the guide rails

▷ Set the guide rails (4) below and above the sheets so that the sheets are positioned exactly horizontally underneath the folding knife (8) and cannot escape upwards or drop downwards.

Re-adjusting the side stops

▷ If the sheet is not folded at the precise point required, both side stops must be checked and re-adjusted using the precise adjustment.

8.3.5 Adjusting fold rollers

WARNING!

Setting of the roller pressure.

Non-observance could result in serious injury or death.

- Never adjust the fold rollers during ongoing operation!
- Push the emergency stop palm button before adjustment.

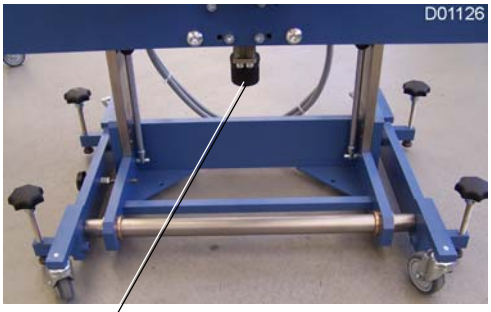

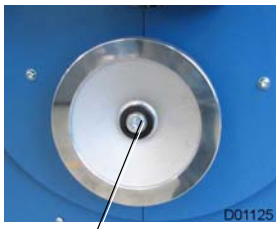

1 Safety handwheel	2 Roller setting element

Illustration 42: Adjust the fold rollers

Adjusting the fold rollers

To obtain a correct fold, the fold rollers must be adjusted to the corresponding product thickness.

Here‘s is how to adjust the fold rollers:

▷ Introduce a sample sheet of the relevant product thickness between the fold rollers.

▷ Hold the sample sheet securely.

▷ Turn the safety handwheel (1) in the running direction of the machine.

▷ Thereby check the roller pressure.

The sample sheet must be pulled out of the fold rollers by hand.

▷ Adjust the roller pressure by turning the roller setting elements (2).

Turning clockwise = roller pressure is increased.

Turning counterclockwise = roller pressure is decreased.

▷ Always set the same roller pressure on both sides.

✓ The fold rollers are adjusted.

.

Thin papers require a weaker roller pressure than thick papers.

8.3.6 Adjusting the folding knife

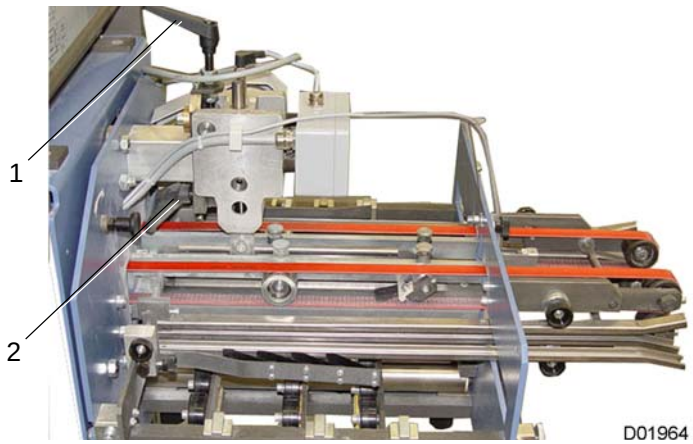

1 Height adjustment	2 Incline adjustment

Illustration 43: Folding knife

Height adjustment

So that the sheets are transferred precisely from the fold rollers, a height adjustment must be carried out on the folding knife, depending on the product thickness.

Procedure:

Setting the folding knife lower:

▷ Turn the height adjustment (1) counterclockwise.

✓ The distance of the folding knife to the sheet becomes smaller.

Setting the folding knife higher:

▷ Turn the height adjustment (1) clockwise.

✓ The distance of the folding knife to the sheet becomes larger.

- If the folding knife is too high, the sheets will not be transferred precisely from the fold rollers.
- If the folding knife is too low down, there may be marks on the sheets.
- If the folding knife is at an extreme inclination angle, it may be that the folding knife needs to be set higher.

Inclination angle adjustment

So that the sheets are not pressed too hard against the sheet stop during the folding process or can be pulled away from the sheet stop, the inclination angle of the folding knife can be adjusted.

Procedure:

▷ If the sheets are pressed too hard against the sheet stop, turn the incline adjustment (2) clockwise.

✓ The folding knife is lower on the infeed and higher on the sheet stop.

▷ If the sheets are pulled away from the sheet stop, turn the incline adjustment (2) counterclockwise.

✓ The folding knife is higher on the infeed and lower on the sheet stop.

8.3.7 Adjusting the sheet outfeed

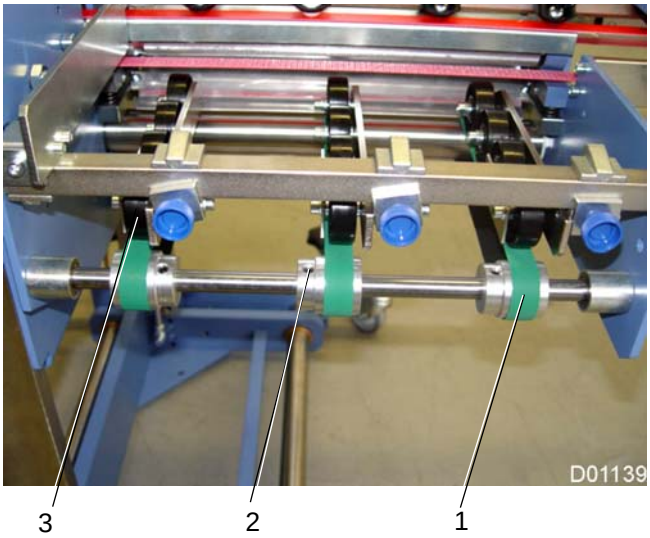

1 Outfeed belts 2 Tape rollers	3 Roller guide rails

Illustration 44: Adjust the sheet outfeed.

Adjusting the outfeed belts

Procedure:

▷ Unfasten the screws in the tape rollers (2).
▷ Adjust the outfeed belts (1) to the format of the folded sheet.
▷ Re-tighten the screws in the tape rollers (2).

✓ The outfeed belts are adjusted.

Adjusting the roller guide rails

Procedure:

▷ Unfasten the knurled screws on the roller guide rails (3).
▷ Adjust the roller guide rails (3) according to the outfeed belts (1).
▷ Re-tighten the knurled screws on the roller guide rails (3).

✓ The roller guide rails are adjusted.

8.3.8 Swiveling the knife unit, Z 2 only

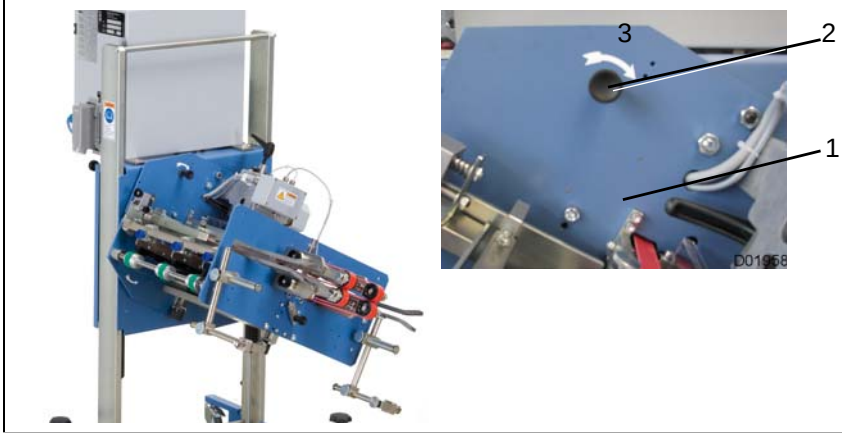

1 Knife unit 2 Index bolt	3 Arrow direction

Illustration 45: Swiveling the knife unit, Z 2 only

Functional description

To be able to establish international fourfold, the knife unit must be swiveled so that the folding knife can work from below.
The infeed height and the folding unit center remain at the same position in this case.
The swivel motion changes the placement position, however.
For this reason, the side stops, fixed and with spring, must be replaced together.

Swivel the knife unit downwards

Procedure:

- ▷ Pull out the index bolt (2).
- ▷ Turn the knife unit (1) 180° clockwise.
- ▷ Re-fit the index bolt (2).
- ▷ Replace the side stops, fixed and with spring.
- ✓ The knife unit is swiveled downwards.

Swivel the knife unit upwards

Procedure:

- ▷ Pull out the index bolt (2).
- ▷ Turn the knife unit (1) 180° counterclockwise.
- ▷ Re-fit the index bolt (2).
- ▷ Replace the side stops, fixed and with spring.
- ✓ The knife unit is swiveled upwards.

8.4 Error messages

8.4.1 Sensor positions

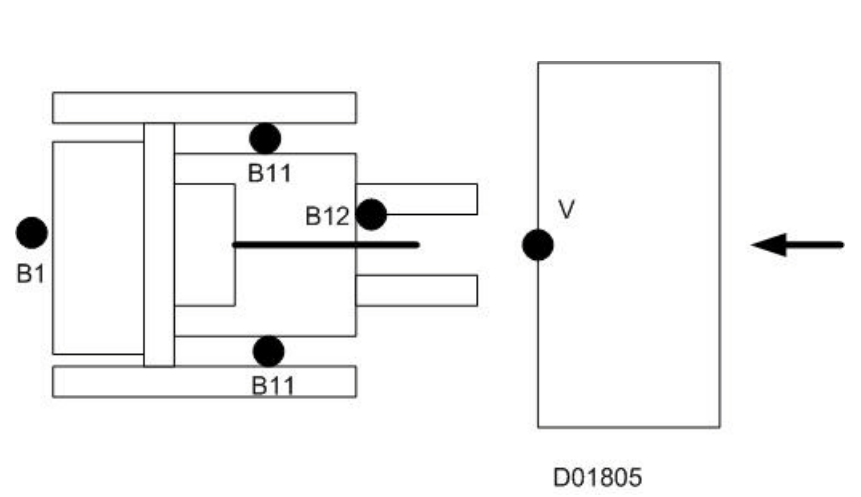

Designation	Task
B12 photoelectric sensor	Folding knife control and sheet length control. (With MC- and M1-Control, Basic). Folding knife control and sheet monitoring. (With NC-, VC- and M1-Control, Advanced).
B11 photoelectric sensor	Sheet monitoring (With NC-, VC- and M1-Control, Advanced).
B1 encoder	Rotary encoder

Checking the sensor function

- Green LED is on = photoelectric sensor is ready for operation.
- Yellow LED is on = photoelectric sensor is covered.

8.4.2 Resetting error messages

- **MC control**:
  See chapter “8.2.2.7 Displaying/resetting an error message”.
- **NC light control**:
  See separate operating manual for the NC light control.
- **VC control**:
  See chapter “8.2.4.6 Displaying/resetting an error message”.
- **M1 control, Basic**:
  See chapter “8.2.5.6 Displaying/resetting an error message”.
- **M1 control, Advanced**:
  See chapter “8.2.6.3 Displaying/resetting an error message”.

8.5 Removing the paper jam

WARNING!

Dejamming of paper jams.

Paper jams can block the drives and they can start up again unexpectedly when the jam is cleared.

Non-observance could result in serious injury or death.

- Dejamming work may only be done on a machine that is switched off and secured against switching on again.
- When removing the paper jam, turn the machine using the safety handwheel only.
- Only start the machine again after completely removing the paper jam, since otherwise there can be property damage to drive belts, transport tapes, fold rollers, etc.

Procedure:

1) Press the EMERGENCY STOP palm button.
2) Try to determine the cause of the paper jam and eliminate it (to prevent subsequent paper jams).
3) Remove, if necessary, all disturbing smoothers, strippers, etc.
4) Carefully remove the jammed paper.
5) Check that no torn-off pieces of paper remain in the machine (to prevent subsequent paper jams).
6) Adjust the removed smoothers, strippers, etc. again.
7) Disengage the EMERGENCY STOP palm button.
8) Start the machine.
9) Feed a single sheet to check the correct function of the machine.
10) If OK, start production.

✓ Paper jam is corrected.

11) If not OK, determine and eliminate the cause.

✓ Paper jam is corrected.

Turning the machine forwards/backwards using the safety handwheel makes it easier to remove the paper jam.

9 Maintenance

9.1 Introduction

For the maintenance of the machine, also observe:

- The safety instructions.
  See chapter “9.1.2 Safety instructions”.
- Safety and protective devices
  See chapter “4.6.7 Checking safety and protective devices”.
- Qualification of maintenance personnel.
  See chapter “9.1.1 Qualification of personnel”.

9.1.1 Qualification of personnel

This table lists the necessary qualification of the personnel related to "Maintenance" of the machine.

	Specially trained personnel	Instructed operating personnel	Instructed personnel with specialized training (mechanical/ electrical engineering)
Operational maintenance	-	X	-
Maintenance	X	-	X
Repair	-	-	X

Table 26: Qualification of personnel; Maintenance
Legend: X permitted, - not permitted

9.1.2 Safety instructions

DANGER!

Hazardous voltage.

Non-observance will result in serious injury or death.

- Only an electrically qualified person may perform work on the machine's electrical system.
- Follow the local occupational safety regulations and electrotechnical regulations.
- There is hazardous residual voltage on the connection terminals of the frequency inverter even when the main switch is switched off. (heed capacitor discharge time).

WARNING!

Dismantling, bridging or bypassing safety and protective devices.

Non-observance could result in serious injury or death.

- No safety or protective devices of the machine may be dismantled, bridged or bypassed.
- Using the check list for safety and protective devices, check that all protective devices are on the machine.
- Report any audible / visible safety-relevant change of the machine to the person at your operation responsible for the system.

WARNING!

Improper maintenance.

Non-observance could result in serious injury or death.

- Maintenance work must be carried out by specially trained and authorized technicians only.
- Heed the local occupational safety regulations.
- Heed the maintenance plan.

WARNING!

Rotating machine parts during maintenance and repair.

Non-observance could result in serious injury or death.

- Work on the machine must be carried out by specially trained and authorized technicians only.
- Switch the machine to de-energized and secure against reconnection by third persons.
- Follow the local occupational safety regulations and electrotechnical regulations.

WARNING!

Operation without protective devices.

Non-observance could result in serious injury or death.

The protective devices protect against danger spots.

- Never operate the machine without protective devices.
- Note that after maintenance or repair work, all protective devices must be reinstalled.

WARNING!

Crushing during maintenance work.

Non-observance could result in serious injury or death.

Maintenance and cleaning work must be carried out by one person only.

WARNING!

Unsuitable maintenance tool.

Non-observance could result in serious injury or death.

- You should only use tools that are in perfect condition.
- Make sure that after adjustment or maintenance work, there are no tools left on or in the machine.

WARNING!

Entanglement hazard when removing the safety handwheel.

Non-observance could result in serious injury or death.

- Turn the main switch to the position <0>.
- Use a padlock to secure the main switch from unintentionally switching on again.

9.2 Customer service

WARNING!

Non-approved safety components.

Non-observance could result in serious injury or death.

- Only approved safety components may be used.
- Use only original parts.

9.2.1 Ordering spare and wear parts

You can obtain the spare and wear parts worldwide via the corresponding MBO agency near you.

For all questions relating to your machine, please also contact your MBO agency.

You can find the address on our home page: www.mbo-folder.com.

For the identification of the machine and the most important machine data, see the name plate on the machine.

1 Name plate

Illustration 46: Name plate

Always provide this information for service requirements and procurement of spare parts:

- Commission number
- Type of machine

Please use only spare parts that are delivered and recommended by the manufacturer!

9.3 Operational maintenance

9.3.1 Checking safety devices

IMPORTANT!

- All devices for shutting down the machine in an emergency must be checked individually and separately from each other.
- If any safety devices malfunction, shut down the machine immediately and secure it against being switched on again.

9.3.1.1 Checking the EMERGENCY STOP palm button

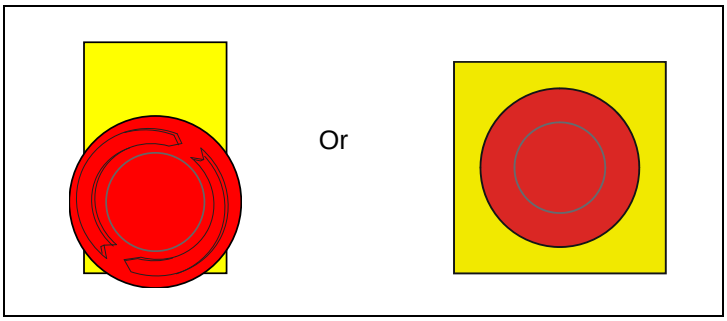

Illustration 47: EMERGENCY STOP palm button

- To prevent immediate or potential hazards, the machine is equipped with an EMERGENCY STOP shut-off device.
- After the <EMERGENCY STOP> palm button is pressed, all electrical drives are switched off.
- EMERGENCY STOP does not disconnect the machine from the electrical supply.

Here‘s how to check the correct function of the EMERGENCY STOP palm button daily:

▷ Switch on the machine.

▷ Press the EMERGENCY STOP palm button so that it remains engaged and in an actuated state.

Pressing the EMERGENCY STOP palm button must cause all machine functions to shut down.

▷ Unlock the emergency stop palm button after ending the test.

✓ The EMERGENCY STOP palm button has been checked.

9.3.1.2 Checking the safety handwheel

WARNING!

Entanglement hazard through defective safety handwheel.
Non-observance could result in serious injury or death.

- Replace the safety handwheel if it moves tight and/or the overrunning clutch does not declutches exactly.
- Replace defective safety handwheels only with new safety handwheels with overrunning clutch.

- Check the overrunning clutch daily for its correct function.
- If the safety handwheel moves tight and/or the overrunning clutch does not declutches exactly, it must be replaced

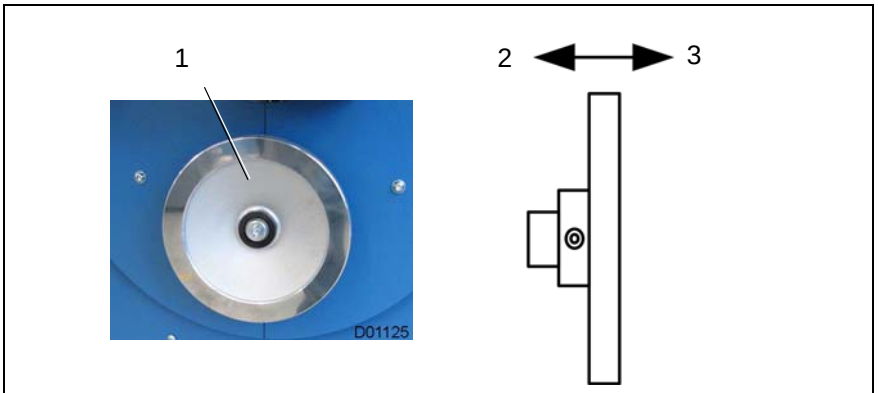

1 Safety handwheel 2 Overrunning clutch position	3 Manual drive position

Illustration 48: Check safety handwheel

The safety handwheel has following positions:

- Overrunning clutch position (2)

  The safety handwheel is decoupled from the machine drive.
  If you turn the safety handwheel the machine does not moves.
- Manual drive position (3).

  The safety handwheel is coupled with the machine drive.
  If you turn the safety handwheel the machine moves.

Here is how to check daily the correct function of the overrunning clutch:

Check ease of movement

▷ Turn the safety handwheel.
The safety handwheel must move easily.
The machine must not move.
✓ The ease of movement is checked.

Check manual drive

▷ Pull the safety handwheel (3) towards you and turn it.
The overrunning clutch is decoupled and the machine is moving.
✓ The manual drive is checked.

Check the overrunning clutch

▷ Release the safety handwheel.
▷ The safety handwheel must snap in safely in the position of the overrunning clutch.
▷ Turn the safety handwheel.
The safety handwheel must move easily.
The machine must not move.
✓ The overrunning clutch is checked.

9.3.2 Cleaning

WARNING!

Rotating machine parts during operational maintenance.

Non-observance could result in serious injury or death.

- Work on the machine must be carried out by specially trained and authorized technicians only.
- Switch the machine to de-energized and secure against reconnection by third persons.
- Follow the local occupational safety regulations and electrotechnical regulations.

CAUTION!

Heavy contamination.

Heavy contamination can impair the functioning of the machine.

Non-observance could result in property damage.

- Clean the machine after each job (at least once per week).
- The dust layer may never be more than 1 mm.
- Especially clean dirt (paper dust, printing powder, etc.) from moving parts.
- Do not use any chemically aggressive washing and cleansing agents!
  If unsuitable detergents or cleaning agents are used, they can attack lacquered surfaces or cause the fold roller coating to swell.
- Never clean the machine using compressed air. (bearing damage)

CAUTION!

Incorrect use of cleaning agents.

Non-observance could result in minor or moderate injury.

- Be sure to follow the manufacturer's safety instructions.
- Avoid any skin contact.
- Wear suitable safety gloves.
- Wear safety glasses.

CAUTION!

Used cleaning cloths.

Non-observance could result in injury and property damage.

- Observe fire hazards resulting from the inflammability of the cleansing agent.
- Dispose of the cleaning rags in an environmentally-friendly fashion.
- Inform yourself by asking the cleaning agent manufacturer about residual risks and about environmentally friendly disposal.

9.3.3 Recommendation of cleansing agents

Flat surfaces and cavities	Suction clean or sweep out
For deposits that adhere to finished surfaces	Solvent-free cleansing agent
Cleaning rollers	MBO Binder GmbH & Co. KG recommends "Varn" cleansing agent with the designation: "VM 111 or VWM Wash". The "Varn“ company delivers to the printing industry worldwide. Therefore, it cannot be excluded that in certain other countries different designations are used. Therefore, please use the respective order no. from the technical data sheets of the "Varn“ company.

Be sure to follow the manufacturer's safety instructions.

9.3.4 Cleaning the machine

- Clean the machine at least once per week.
- The dust layer must never exceed 1 mm (0.039 in.).
- Heavy contamination can impair the functioning of the machine.
- Never clean the machine with compressed air as penetrated dirt destroys the bearings.

Procedure:

▷ Suck up the dirt.
▷ Use a brush for hard-to-reach areas.
▷ Wipe down the surfaces using a dry cloth.
▷ Do not use any chemically aggressive washing and cleansing agents!
▷ Never clean the machine with compressed air as penetrated dirt destroys the bearings.

✓ The machine is clean.

9.3.5 Cleaning fold rollers

CAUTION!

Incorrect use of cleaning agents.

Non-observance could result in minor or moderate injury.

- Be sure to follow the manufacturer's safety instructions.
- Avoid any skin contact.
- Wear suitable safety gloves.
- Wear safety glasses.

CAUTION!

Used cleaning cloths.

Non-observance could result in injury and property damage.

- Observe fire hazards resulting from the inflammability of the cleansing agent.
- Dispose of the cleaning rags in an environmentally-friendly fashion.
- Inform yourself by asking the cleaning agent manufacturer about residual risks and about environmentally friendly disposal.

CAUTION!

Unsuitable cleaning agents.

Non-observance could result in property damage.

- Only use the "VM 111 or VWM Wash" cleaning agent from Varn.
- Be sure to follow the manufacturer's safety instructions.

- Deposits of printing powder and/or printing ink on the fold rollers can lead to a reduction in quality of folding products.
- Clean the fold rollers weekly and as needed.

Knurled steel fold rollers

Procedure:


1) Turn the main switch to the position <0>.
   Use a padlock to secure the main switch from unintentionally switching on again.
2) Clean off coarse dirt using a brass wire brush.
3) For remaining cleaning of the folding rollers, use the "VM 111 or VWM Wash" cleaning agent only.
4) Use only linen cloths as cleaning cloths.
5) Moisten the linen cloth using the roller cleaning agent.
   Never immerse the fold rollers in the roller cleaning agent.
   Penetrating roller cleaning agent can destroy the bearings.
6) Use the linen cloth to remove the deposits on the fold rollers.
7) Dry the fold rollers with a dry linen cloth.
8) Remove the padlock on the main switch.
   Ensure that all persons are in the secured area.
   Turn the main switch to the position <1>.

✓ The knurled steel fold rollers are cleaned.

Spiral fold rollers

Procedure:


1) Turn the main switch to the position <0>.
   Use a padlock to secure the main switch from unintentionally switching on again.
2) To clean the fold rollers, use the roller cleaning agent "Varn-Wash VM 111" or "VWM" only.
3) Use only linen cloths as cleaning cloths.
4) Moisten the linen cloth using the roller cleaning agent.
   Never immerse the fold rollers in the roller cleaning agent.
   Penetrating roller cleaning agent can destroy the bearings.
5) Use the linen cloth to remove the deposits on the fold rollers.
   Apply only a little pressure when rubbing.
6) Dry the fold rollers with a dry linen cloth.
7) Remove the padlock on the main switch.
   Ensure that all persons are in the secured area.
   Turn the main switch to the position <1>.

✓ Spiral fold rollers are cleaned.

High-grip fold rollers

High-grip fold rollers have an open-pored surface.
If small particles or partially dissolved printing ink or printing powder are absorbed by this surface, they harden and the high-grip fold rollers become unusable.

Procedure:

1) Turn the main switch to the position <0>.
   Use a padlock to secure the main switch from unintentionally switching on again.
2) To clean the high grip rollers, use the roller cleaning agent "Varn-Wash VM 111" or "VWM" only.
3) Use only linen material for cleaning cloths.
4) Moisten the linen cloth using the roller cleaning agent.
   Never immerse the high-grip fold rollers in the roller cleaning agent. Penetrating roller cleaning agent can destroy the bearings.
5) Use the linen cloth to remove the deposits on the high-grip fold rollers.
   Exert only slight pressure.
6) Remove the padlock on the main switch.
   Ensure that all persons are in the secured area.
   Turn the main switch to the position <1>.
7) Start the folding machine and set the speed to the maximum value.
8) The centrifugal force produced will fling the partially dissolved ink and powder particles as well as absorbed roller cleaning agent from the roller coating.
9) Stop the folding machine.
   Turn the main switch to the position <0>.
   Use a padlock to secure the main switch from unintentionally switching on again.
10) Dry the high-grip fold rollers with a dry linen cloth. Exert only slight pressure.
11) Remove the ink and powder particles thus flung out from the machine.
12) Remove the padlock on the main switch.
    Ensure that all persons are in the secured area.
    Turn the main switch to the position <1>.

✓ High-grip fold rollers are cleaned.

9.3.6 Cleaning the optical sensors

- The optical sensors of the machine get dirty during production due to paper dust and printing powder.
- They should therefore be cleaned after each job (daily).

Here's how to proceed to clean the optical sensors.

Prerequisites

These prerequisites must be fulfilled:

- Main switch is switched off and secured.
- EMERGENCY STOP palm button is pressed.

Cleaning the optical sensors

Here's how to clean the optical sensors:

▷ Clean the optical elements of the sensors with a dry, lint-free cloth.

✓ The optical sensors are cleaned.

9.4 Maintenance

WARNING!

Rotating machine parts during maintenance.

Non-observance could result in serious injury or death.

Maintenance work must be carried out by specially trained and authorized technicians only.

- Turn the main switch to the position <0>.
- Use a padlock to secure the main switch from unintentionally switching on again.
- Follow the local occupational safety regulations and electrotechnical regulations.
- Make absolutely sure that before the machine is switched back on, all persons are in the secured area.

9.4.1 Checking transport belts on the infeed

Check the transport tapes monthly for their running properties, tension, condition, and soiling. If it is no longer possible to adjust centered running or achieve the necessary tension or if the general condition of the transport belts is poor, they must be replaced.

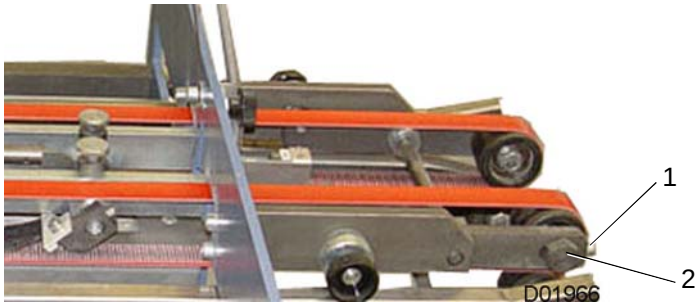

1	Hexagon head screw	2	Hexagon nut

Illustration 49: Check transport belts on the infeed.

Center transport belt

Centering is carried out automatically via the crowned tape rollers.

Tension the transport belt

Procedure:

1) Unfasten the hexagon nut (2).
2) Turn the Allen key (1) clockwise.
   Ensure that the belt is not over-stretched.
3) Re-tighten the hexagon nut (2).

✓ Transport belts are tensioned.

Replacing the transport belt

Only have the transport belts replaced by MBO Service or by an authorized customer service agent.

9.4.2 Checking transport belts on the outlet

- Check the transport tapes monthly for their running properties, tension, condition, and soiling.
- If it is no longer possible to achieve the necessary tension or if the general condition is poor, they must be replaced.

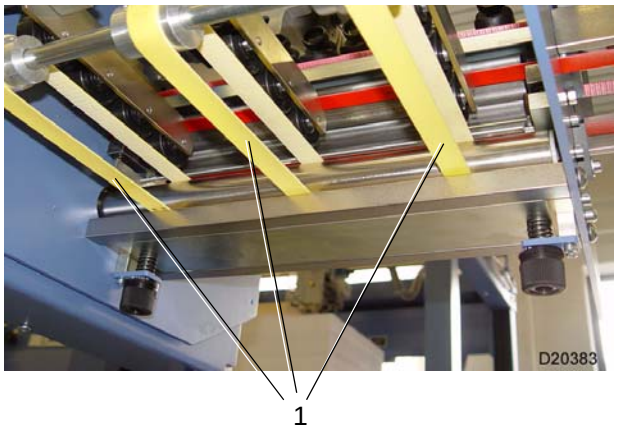

1 Transport tapes

Illustration 50: Transport belts on the outlet

Center transport belt

Centering is carried out automatically via crowned tape rollers.

Tension the transport belt

The transport belts (1) are elastic and do not need to be tensioned.

Replacing the transport belt

Only have the transport belts replaced by MBO Service or by an authorized customer service agent.

9.4.3 Checking the drive belt

- Check the drive belt monthly for its running properties, tension, condition, and soiling.
- If it is no longer possible to achieve the necessary tension or if the general condition of the drive belt is poor, it must be replaced.

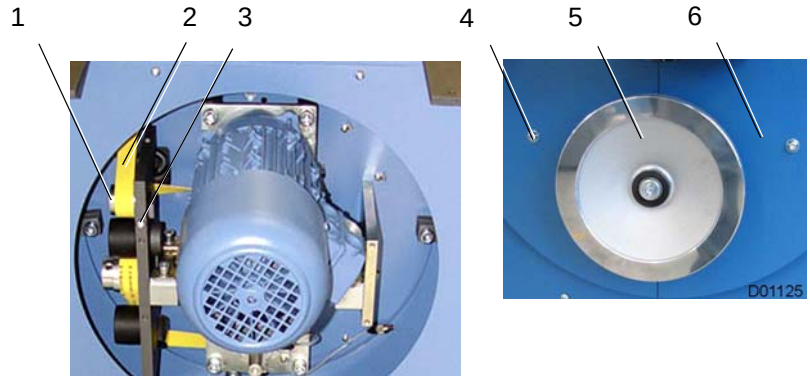

1	Tape roller with Allen screw	4	Screws
2	Drive belt	5	Safety handwheel
3	Tensioning screw	6	Guard

Illustration 51: Drive belt

Centering the drive belt

Centering is carried out automatically via the crowned tape rollers. Tension the drive belt:

Procedure:

1) Remove the safety handwheel (5).
2) Remove the screws (4) and the guard (6).
3) Unfasten the Allen screw in the tape roller (2).
4) Turn the tensioning screw (3) clockwise.

   The drive belt (1) is tensioned.

   Ensure that the belt is not over-stretched.
5) Tighten the Allen screw in the tape roller (2) again.
6) Fasten the guard (6) with the screws (4).
7) Fit the safety handwheel (5).

✓ Drive belt is tensioned.

Replacing the drive belt

Only have the drive belt replaced by MBO Service or by an authorized customer service technician.

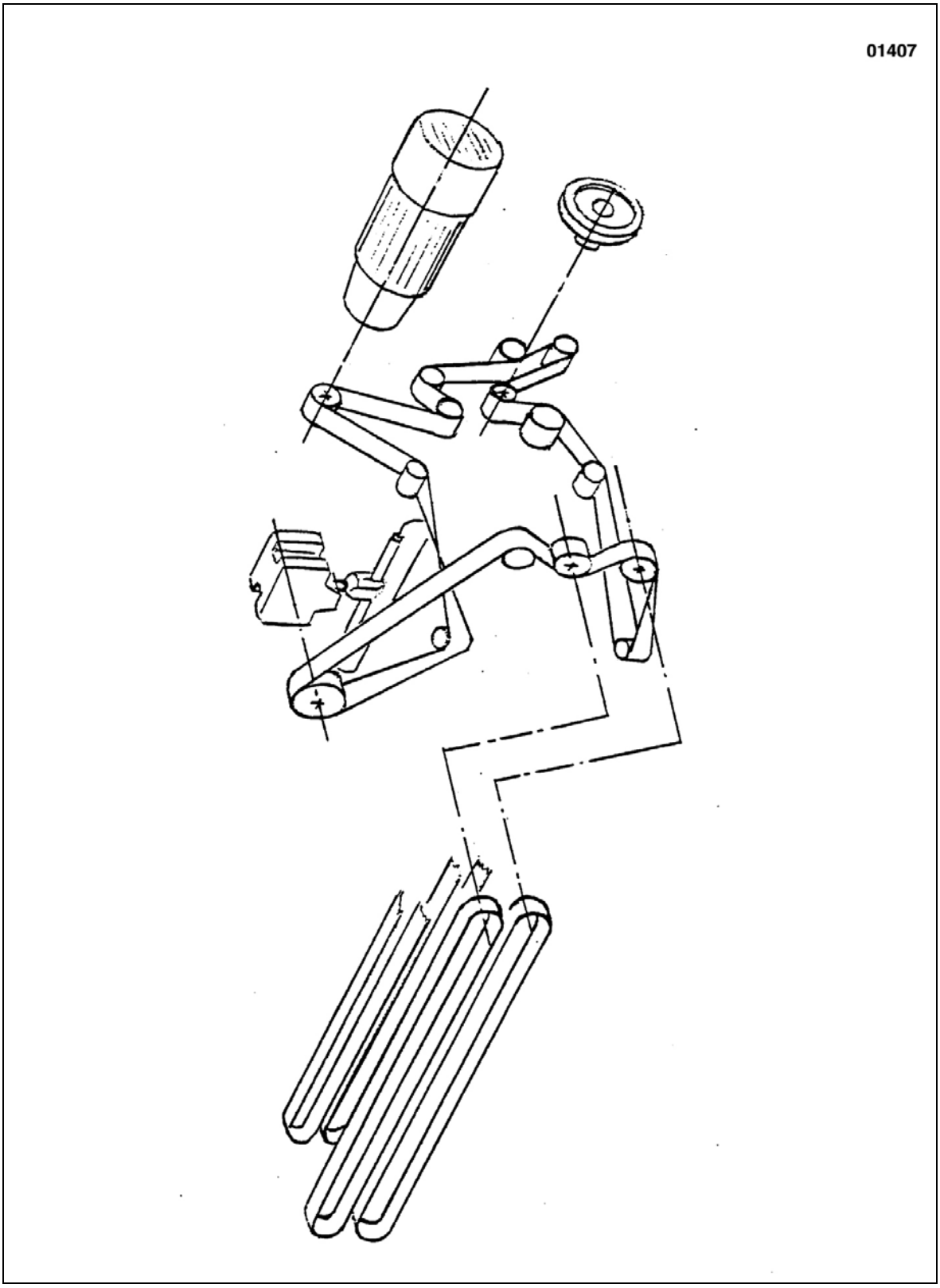

Illustration 52: Drive belt course

9.4.4 Checking the fold rollers

Only have the fold rollers replaced by MBO Service or by an authorized customer service technician.

9.4.4.1 Contamination and damage

Check the fold rollers weekly for soiling and damage:

- Clean the fold rollers if necessary.
  See chapter “9.3.5 Cleaning fold rollers”
- If the fold rollers are damaged, they must be replaced.

9.4.4.2 Tension and wear-off

- Check the fold rollers every six months for tension and wear-off.
- If no more even tension can be adjusted, the fold rollers must be replaced.

9.4.5 Checking the folding knife blade

Check the blade of the folding knife daily for damage such as deformation, notches, etc.

Procedure:

▷ Perform a visual check on the blade of the folding knife.

✓ The folding knife blade has been checked.

Only have the blade of the folding knife replaced by MBO Service or by an authorized customer service agent.

9.4.6 Lubricating the knife guide

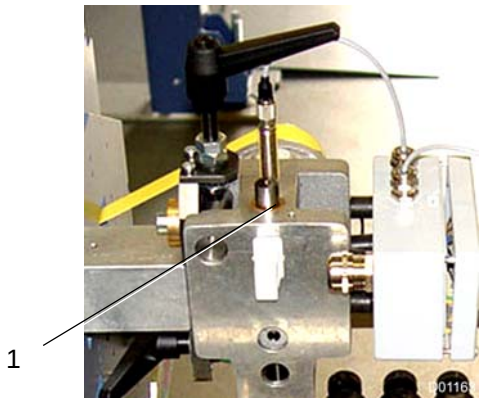

1 Storage

Illustration 53: Lubricating the knife guide

Procedure:

▷ Clean the bearing (1) on the knife guide weekly and apply an oil film.

✓ Bearing of the knife guide is cleaned and oiled.

Only use a few drops of oil as too much lubricant would otherwise reach the sheets via the knife guide!

9.4.7 Lubricating the safety handwheel

To preserve the safety function of the overrunning clutch:
- Clean and lubricate the safety handwheel monthly.
- Do not use grease (to high viscosity).
- The manufacturer recommends the lubricant „Fin Lube TF“ of company INTERFLON.

1 Lubrication nipple

Illustration 54: Safety handwheel

Procedure:
▷ Clean the safety handwheel.
▷ Lubricate the safety handwheel monthly using the lubrication nipple (1).
✓ The safety handwheel is lubricated.

9.5 Maintenance schedule

Incorrect maintenance intervals during multi-shift operation.
Non-observance could result in property damage.

- All specified maintenance intervals are designed for single-shift operation.
- For multi-shift operation, calculate the specified intervals accordingly.

	Chapter No.:	Step	Interval	Date	Signature
Operational maintenance	9.3.1	Checking safety devices	Daily		
	9.3.4	Cleaning the machine	Weekly		
	9.3.5	Cleaning fold rollers	Weekly		
	9.3.6	Cleaning the optical sensors	Weekly		
Maintenance	9.4.1	Checking transport belts on the infeed	Monthly		
	9.4.2	Checking transport belts on the outlet	Monthly		
	9.4.3	Checking the drive belt	Monthly		
	9.4.4	Checking the fold rollers	Weekly		
	9.4.5	Checking the folding knife blade	Weekly		
	9.4.6	Lubricating the knife guide	Weekly		
	9.4.7	Lubricating the safety handwheel	Monthly		

Table 27: Maintenance schedule

MBO recommends attaching a copy of this maintenance schedule to the machine.

9.6 Repair

WARNING!

Improper repair.

Non-observance could result in serious injury or death.

- Repair work is only permitted to be carried out by trained and authorized persons with special expert knowledge.
- Heed the local occupational safety regulations.
- Carry out a function test after the repair.

Only have repair work performed by MBO Service or by an authorized customer service agent.

10 Decommissioning, storage

10.1 Introduction

10.1.1 Qualification of personnel

This table lists the necessary qualification of the personnel related to "Decommissioning and storage" of the machine.

	Specially trained personnel	Instructed operating personnel	Instructed personnel with specialized training (mechanical/ electrical engineering)
Decommissioning	-	-	X
Storage	X	-	-
Putting the machine back into operation	-	-	X

Table 28: Qualification of personnel; Decommissioning, storage
Key: X permitted, - not permitted

10.1.2 Safety instructions

CAUTION!
Incorrect storage.
Non-observance could result in property damage.
Observe the corresponding storage conditions.

10.2 Decommissioning

10.2.1 Temporary shutdown

Here's how to shut the machine down temporarily.

Prerequisites These prerequisites must be fulfilled:

- Main switch is switched off.
- Compressed air supply is cut off.

Shutting down the machine

Here's how to shut down the machine:

▷ Remove products, tools from the machine.

▷ Clean and maintain machine.

See chapter “9 Maintenance”.

✓ The machine is temporarily shut down.

After a temporary shutdown, the machine must be commissioned again.
See chapter “7 Set-up, commissioning”.

10.2.2 Final decommissioning

Here's how to shut the machine down permanently.

Prerequisites

These prerequisites must be fulfilled:

- Main switch is switched off.
- Electrical supply is disconnected.
- Compressed air supply is disconnected.

Shutting down the machine permanently

Here's how to shut down the machine permanently:

▷ Remove products, tools from the machine.

▷ Dismantle the machine by following the installation steps in the opposite sequence.

▷ For transport, observe the instructions in Chapter “6 Transport, interim storage”.

✓ The machine is permanently shut down.

10.3 Storage

Here's how to proceed to store the machine.

Prerequisites

These prerequisites must be fulfilled:

- Machine is shut down.

Storing the machine

Here's how to store the machine:

▷ Check the premises with respect to the temperature and humidity.

See chapter “3.2.6 Ambient conditions”.

The higher the humidity, the greater the danger of corrosion.

▷ For long-term storage, measures for corrosion protection must be taken.

▷ Observe the specifications regarding the weight and size of the machine when selecting the premises.

See chapter “3.2 Technical data”

▷ Use a suitable fork lift for transport.

See chapter “3.2.4 Shipping and transport data”.

▷ Cover the machine with foil.

✓ The machine is stored.

11 Disposal

11.1 Introduction

11.1.1 Qualification of personnel

This table lists the necessary qualification of the personnel related to "Disposal" of the machine.

	Specially trained personnel	Instructed operating personnel	Instructed personnel with specialized training (mechanical/ electrical engineering)
Disposal	X	-	-

Table 29: Qualification of personnel; Disposal
Legend: X permitted, - not permitted

11.1.2 Safety instructions

CAUTION!

Improper disposal.

Non-observance could result in environmental damage.

Comply with the corresponding national and regional regulations, laws and directives.

11.2 Disposal/recycling

The environmentally compatible and professional disassembly and disposal of the machine is the responsibility of the owner/operator.

EU countries

- Comply with the corresponding European directives.
- Comply with the corresponding national and regional laws and regulations.

Non-EU countries

- Comply with the corresponding national and regional regulations, laws and directives.

Here's how to proceed to dispose of/recycle the machine.

Prerequisites

These prerequisites must be fulfilled:

- Decommission the machine prior to disposal.
  See chapter “10.2 Decommissioning”.
- Heed transport instructions.
  See chapter “6 Transport, interim storage”.

Disposing of/ recycling the machine

Here's how to dispose of/recycle the machine:

- Separate machine parts and electrical components by type and dispose of them properly.

✓ The machine is disposed of.

All parts, consumables, and supplies of the machine:

- Separate by type
- Dispose of in accordance with local regulations, laws, and directives.

If you have any further questions regarding disposal, please contact the manufacturer!

MBO Group worldwide

MBO Germany

MBO Maschinenbau Oppenweiler Binder GmbH & Co. KG
PO Box 1169
71567 Oppenweiler
GERMANY
Tel.: +49 7191 46 0
Fax: +49 7191 46 34
www.mbo-folder.com
info@mbo-folder.com

MBO Portugal

MBO Binder Máquinas Gráficas, S.A.
Rua Joaquim Alves da Silva, 240, 420 e 570
4455-473 Perafita
PORTUGAL
Tel.: +351 22 99822 00
Fax: +351 22 99822 01
www.mbo-folder.com
info@mbo-folder.com

MBO America

MBO America
4 E Stow Road, Suite # 12
Marlton, NJ 08053
USA
Tel.: +1 609 267 2900
Fax: +1 609 267 1477
www.mboamerica.com
info@mboamerica.com

MBO France

MBO France SAS
Z. A. Burospace N° 3
Route de Gisy B.P. 33
91571 Bievres Cedex
FRANCE
Tel.: +33 1 6935 5090
Fax: +33 1 6935 5099
www.mbo-folder.com
info@mbofrance.fr

MBO China

MBO Binder Graphic Systems (Beijing) Co. Ltd.
Haishunde Building, 201 room, No.A1,
Donghuanbei Road, BDA
Beijing 100176
P.R. CHINA
Tel.: +86 10 6786 4021
Fax: +86 10 6787 3502
www.mbo-folder.com.cn

Herzog & Heymann

Herzog & Heymann GmbH + Co. KG
PO Box 110355
33663 Bielefeld
GERMANY
Tel.: +49 5205 7509 0
Fax: +49 5205 7509 20
www.herzog-heymann.com
info@herzog-heymann.com

MBO
Folding Technology

Operating Manual

Z 2 Knife folding unit

Contents

Prologue

The Z 2 Knife Folding Unit by MBO you have purchased is a valuable piece of equipment. It is absolutely imperative that you comply with all Safety Regulations and Safety Instructions. This Operating manual is designed to instruct you to correctly operate the machine, to comply with the Safety Regulations, and also to maintain the machine properly.

1.0 Machine specification

1.1 Manufacturer

MBO Binder & Co. - Maschinenbau Oppenweiler
Grabenstrasse 4, 71570 Oppenweiler
Postfach 1169, 71567 Oppenweiler
Telefon 07191/46-0
Telefax 07191 4634
E-Mail info@mbo-folder.com

1.2 Type:

Z 2 Knife folding unit

1.3 Technical Data

1.3.1 Sizes

Infeed width:	15 cm min.;	48 cm max.
Infeed length:	8 cm min.;	32 cm max.
Infeed height:	45 cm min.;	95 cm max. infinitely adjustable
Electrical data:	0.37 kW	
Speed:	40 – 160 m/Min.	
Productivity:	max. 15.000 cycles/hour	
Weights:	**net:**	**gros:**
	240 kg	300 kg

1.3.2 Floor plan (Measurements in cm)

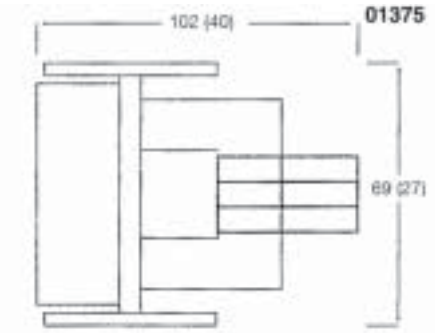

1.4 Documentation

Customer: _____

Machine configuration: **Z 2 Knife Folding**

Machine No.: _____

Serial No.: _____

BA-Batch counter IVO: _____

Electrical data:

Wiring diagram no.: _____

Operational voltage (V:/Hz:): _____

Control voltage (V:/A:): _____

Control voltage (V:/A:): _____

Total nominal current (A:): _____

Fuse at power supply (A:): _____

Wiring diagram no.: _____

CE marking no.: _____

Certificate of Conformity: _____

Noise level (dB/AI): _____

GS marking no.: _____

1.5 User information

The knife folding unit Z 2 is a separate drivable 4-fold folding machine which has its own drive for the production of different 4-folding works.

- In connection with buckle folding machines it is possible to produce the German, Internatio nal or English 4-fold.
- In connection with KL and KTL version of the Combi Folding Machine, it is possible to produce the international and English 4-fold.
- In connection with the KZ version the German, International as well as the English 4-fold can be produced.

The knife folding unit Z2 can (through self-control) be placed beside other machines (for example folding machine of other manufacturers or saddle stitcher etc).

2.0 BASIC SAFETY INSTRUCTIONS

2.1 Warnings and symbols

The following designations or symbols are used for very special instructions in this Operating Manual:

>NOTICE< Special instructions in respect to the economical use of the machine.

>ATTENTION< Special instructions or requirements and prohibitions to avoid injuries and damage.

>DANGER< Instructions or requirements and prohibitions to prevent personal injuries or extensive damage.

2.2 Safety in the working place Destined use of the Vertical Stacker Delivery

2.2.1 MBO units correspond to their prescribed Safety Technical Requirement at the time of their shipment. For this purpose, any moveable and rotating parts are covered with protective hoods and are mechanically or electrically interlocked to such an extent as to not unreasonably detract from the operation.

- Single person operation only (insufficient view at the drive side).

2.2.2 With technical safety precautions it is extremely important that all operating personnel receive sufficient technical safety instructions and are advised of all potential sources of danger. However, it must be remembered that even with proper use of the machine, accidents can occur which present a danger to life and limb of the operator or third parties. Respectively, it does not exclude the detraction of the machine and other material assets.

2.2.3 The delivery should only be operated when in good working order. Any malfunctions that may impair safety must be removed immediately by trained personnel of the manufacturer/supplier.

2.2.4 The delivery is exclusively designed to handle folded paper sheets. The processing of any other materials should not be attempted as the manufacturer or supplier will not be liable for any resulting damage.

2.2.5 Carefully read the complete Operating Manual, including the Safety and Service Requirements, before you operate the machine.

2.2.6 The Operating Manual should be kept with the machine at all times.

2.2.7 Complete the Operating Manual, if necessary with internal Safety Instructions, as well as with the legal regulations for the Prevention of Accidents.

2.2.8 Make sure that all frequently substituted operators are thoroughly informed about the aforementioned subjects and trained accordingly.

2.2.9 Never remove any protective or safety devices from the delivery, and do not make any changes that may impair the safety of the delivery.

2.2.10 Never use any tools which are not in perfect condition, and make sure that no tools are left on the delivery after completion of settings and maintenance work. Tools that fall into the delivery may cause serious injuries and damage.

2.2.11 Note that all Safety Instructions are kept in a legible and visible condition.

2.2.12 Any audible and visible change on the delivery in relation to its safety must be reported immediately to the supervisor or manager of your company.

2.2.13 All operating personnel should be aware that loose clothing, jewellery or long hair can cause serious injuries if caught in the delivery.

2.2.14 It is absolutely prohibited to clean the transport tapes or pressing rollers, eliminate malfunctions, or to undertake adjustments while the delivery is in operation.

>DANGER< Therefore, always activate the **EMERGENCY STOP** button.

2.2.15 Make sure that no other person starts the delivery while you are working on it, e.g. adjustment or other works!

>DANGER< Therefore, always activate the **EMERGENCY STOP** button, or turn **OFF** the main switch, or unplug the delivery.

2.2.16 Do not immediately turn the delivery ON if it has stopped for any inexplicable reason. Make sure that the delivery is in good working condition and that no other person is working on the delivery.

2.2.17 Turn off the main switch and secure it, if necessary, with a lock if you are required to undertake extensive mechanical or electrical maintenance and repair work.

2.2.18 Never open the main or subcontrol panel! Only authorised personnel should gain access to electronic control cabinets as there are no user serviceable parts.

>DANGER< if control cabinet is open! All main terminals could be alive even though the mains switch has been turned off.

2.2.19 Any damaged cables or electrical connections must be reported to the appropriate supervisor of your company.

2.2.20 Machine connections must be installed in such a manner that no cables, tubes or hoses are left trailing.

2.3 Safety Device

2.3.1 Protection hoods – Overview

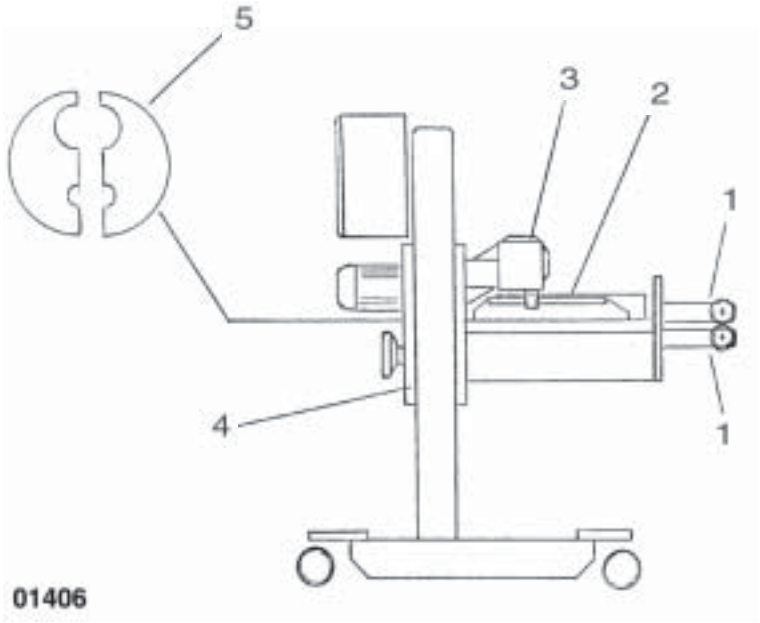

2.3.2 Protection hoods – check list

Pos	Designation	Function Control	Visible control	Result	Note
1	Protection infeed - Belt crack				
2	Protection knife				
3	Protection belt				
4	Cover				
5	Protection drive - part				
	Date	**Name**			**Signature**

3.0 Transport, Installation and initial operation

This part of the Operating Manual is specifically directed to service personnel and internal authorised personnel responsible for transportation and installation.

3.1 Transport

The complete knife folding unit **1** is shipped on a pallet or in a crate. Carry the unit as close as possible to its final position by moving with a fork lift.

Unscrew the folding unit off the pallet, lift it up unilaterally and put under stabile blocks of wood, screw on enclosed machine rolls **2** to trolley **3**. Take out blocks of wood and repeat this process on the other side. Roll folding unit from pallet.

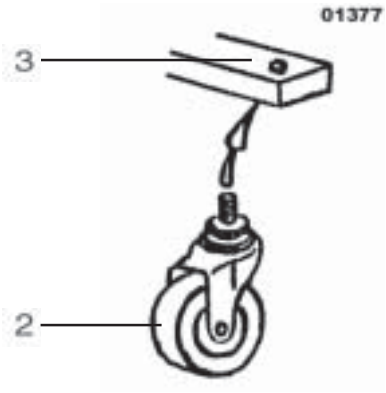

>DANGER< You may sustain personal injuries or the delivery may tip over! Two persons are required to brace the folding unit.

3.2 Erection

The knife folding unit Z 2 is positioned at the respective exit of the folding machine. Before the position of Z2 is secured through brakes of machine rolls **4,** it is necessary to take care:

>NOTICE< that the middle of the folding unit and the middle (or folding line) of the sheet coming from the preceding folding unit agree with each other.

After positioning the knife folding unit, the Z2 is lifted up from the machine rolls through the four setting screws **5.** After loosing both knurled screws **6**, the infeed height is adjusted – push down or pull up at the frame of the folding unit which is leaned (based) on two gas struts.

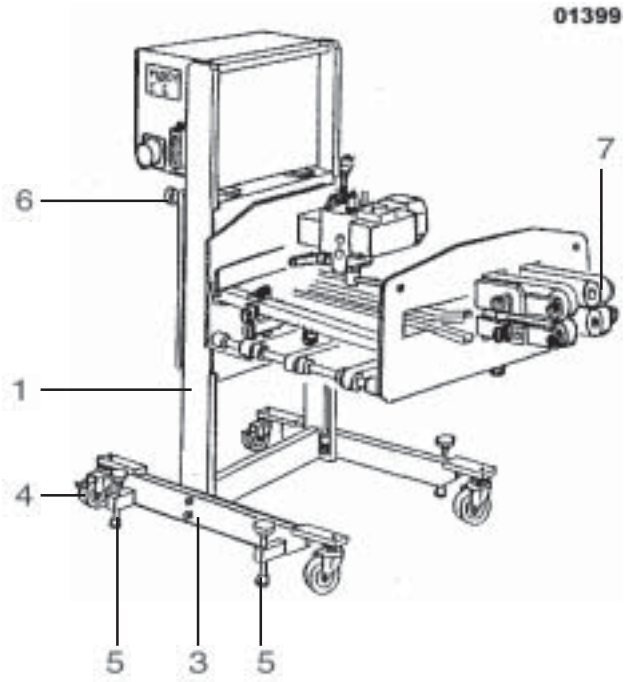

>NOTICE< The infeed level of transport tapes **7** should agree to the outlet level of the preceding folding unit.

3.3 Installation

Clean the knife folding unit with rust preventing agents.

3.4 Electrical connection

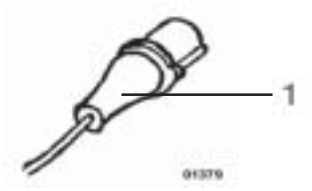

The knife folding unit Z2 is connected with the MBO folding machine through the round power plug **1** and the rectangular control plug **2**.

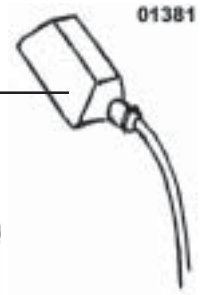

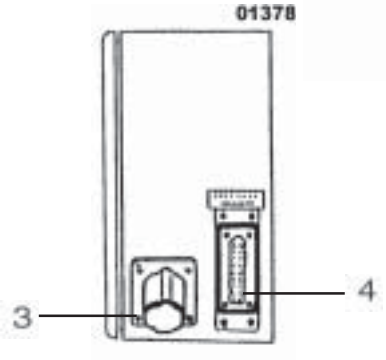

The MBO delivery placed at (beside) the Z2 is connected with the round power socket **3** and the rectangular control socket **4** „machine control“.

If no MBO delivery is used behind the Z2, the dummy plug **5** (without cable) has to be inserted. Due to its own drive, the Z2 may also be used in other machines.

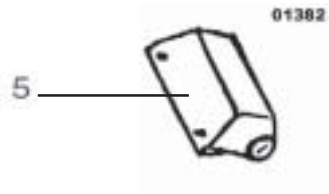

For this purpose, insert power plug to power supply **7** and control plug into „self control“ socket **6** at control panel.

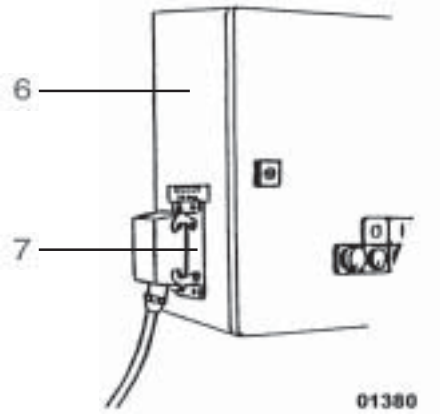

>DANGER< Please bear in mind that, in case of use in other machines, there is no joint disconnection of the knife folding unit Z2 and the foreign machine! Manufacturer and supplier will not be liable for any damages or injuries caused by the missing of safety disconnection!

4.0 Operation (Handling of the machine)

4.1 Control panel

The following control elements are fixed at the control cabinet:

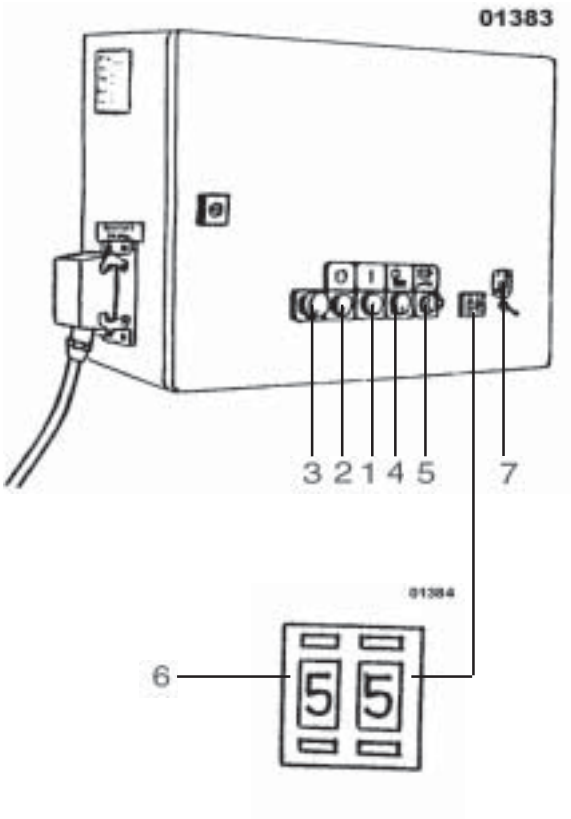

1 Black button for machine ”**START”**

2 Red button for machine ”**STOP”**

3 Red mushroom button with interlock for ”**EMERGENCY STOP”**

4 White button for sheet infeed

>NOTICE< Only if Z2 is connected with a MBO folding machine.

5 Potentiometer for infinite speed regulation

6 Decade switch for control of knife release (minimum value must be 43). For calming down the sheet under the knife, this value can be increased. A release of the knife is thus achieved.

7 Toggle switch with 3 control positions

a) Position up:

Position of switch during production

b) Position middle:

Knife is „OFF“, i.e. in order to stop a sheet under the knife while making ready.

c) Position down:

Brief jogging down and afterwards up **(a)** results in the release of only one knife cycle while making ready.

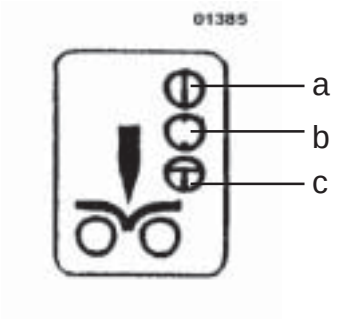

4.2 Adjustment of foldrollers

Through turning the safety hand wheel **1** manually and feeling the respective product thickness through setting screws **2**, the foldrollers are adjusted uniformly on both sides.
These are located under or above the foldrollers.

>NOTICE< Thin paper needs less pressure of foldrollers than thick paper.

>DANGER< Never carry out foldroller settings while machine is still running! Machine must be turned OFF! Use EMERGENCY-STOP switch while setting!

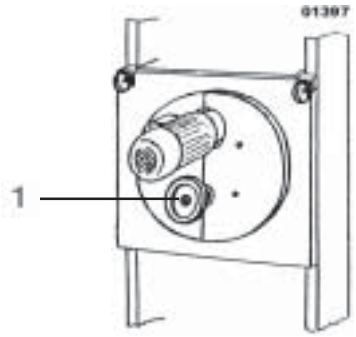

4.3 Sheet infeed

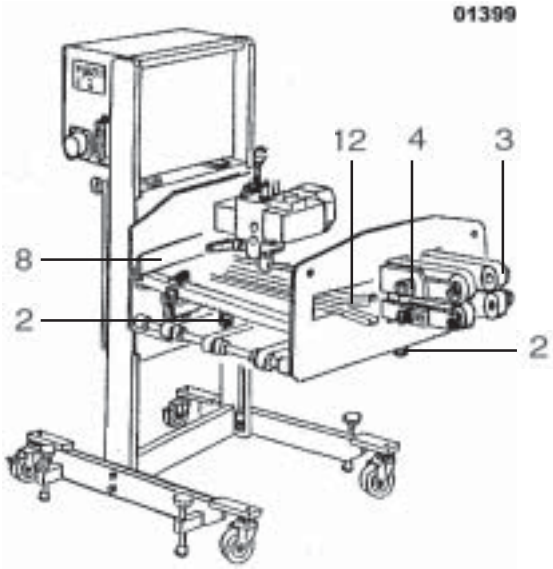

The inner width of the infeed tapes **3** is set to thickness of processed product through knurled screw and excenter **4**.

Additionally, sheet infeed or transport can be set through lowering or increasing the transport rolls **5**. Loosen screw with hexagon screw **6** on the axis of the roller and adjust it through knurled screw **7**. The brushes **9** are set at the rear edge of the sheet so that the sheets can not bounce back from stop **8**. Then, a sheet is manually turned in and the lateral sheet stops **10** (fixed stop) and **11** (spring stop) are adjusted.

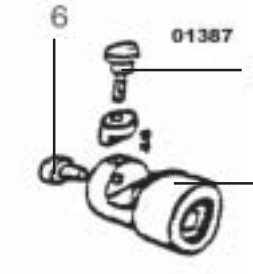

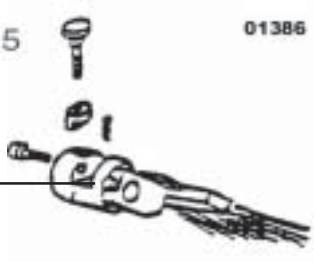

The sheet should possibly run exactly to the fixed stop, the rest is pressed on by the spring stop. The control rails **12** are inserted under and above the sheet to be folded so that the sheets are lying exactly horizontal under the knife and do not swerve to the top or sag down.

If the sheet is not folded exactly at the desired place, both side stops have to be checked and re-adjusted.

>NOTICE< For this, please consider that the sheet runs exactly inside the fixed stop furthermore after adjusting the side stops. Through lateral relocating of the complete folding unit, a readjustment is possible. For this, loosen connection elements to folding machine (see 4.5).

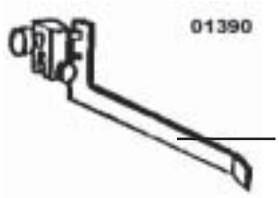

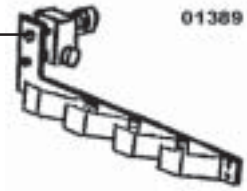

4.4 Sheet outlet

After running through the foldrollers, the sheet reaches the left or right exit belts **2** through a deflecting sheet metal which is changeable through lever **1**.

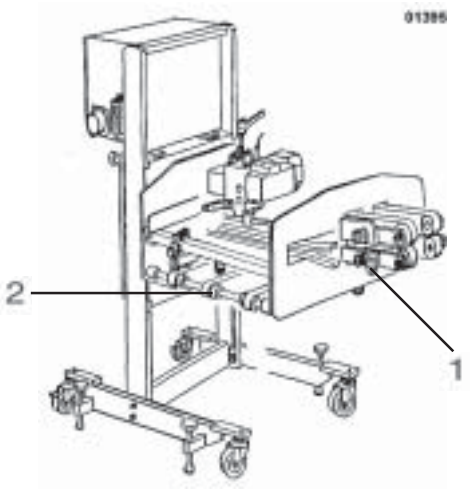

These ones have to be adjusted to the size of the sheet to be folded after loosening the screws in tape rollers **3**.

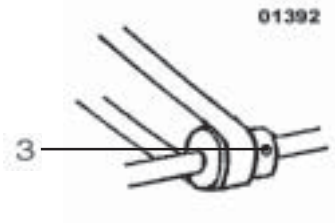

The roller tracks **4** are set on these exit belts.

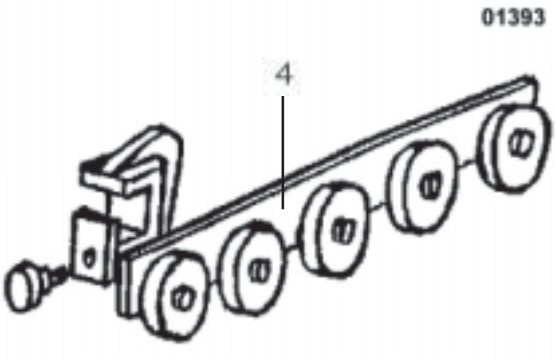

4.5 Position securing

>NOTICE< After terminating all adjustments, the knife folding unit is fastened at the cross bar of the preceding folding unit **6** through connection elements **5** and thus secured against unintended moving.

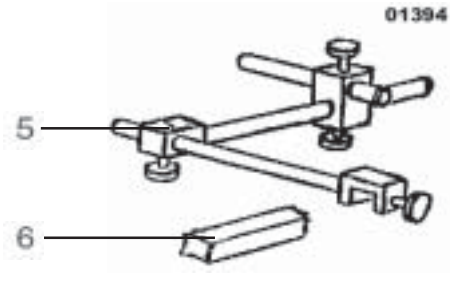

4.6 Knife control

Folding unit **1** operates independently. The knife motion is activated by photocell **2** at the entrance of the Z2.

Set the time of release as follows: The path between photocell and sheet stop is a fix gap of 43 cm. Enter this value into the digital push button **3** through push buttons. Function control - after the folding sheet has passed the photocell.

If the red LED at the amplifier **4** expires, the calculator is turned ON. After the path of 43 cm is passed, the knife is activated and moves down.

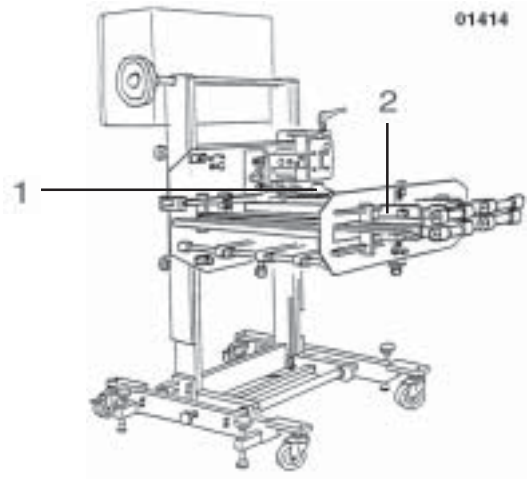

>NOTICE< If a longer levelling time of the sheet is to be achieved, enter a larger value (for example 50 cm, or more)

>ATTENTION< At very high levelling times, a collision of the following sheet with the folding knife or with the outcoming sheet may appear under certain circumstances.

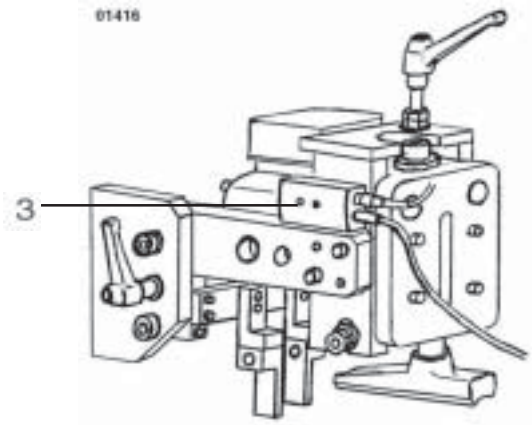

Remedy:

a) Reduce levelling time (if possible)

b) Increase speed of Z2 (if possible) a little.

c) Reduce speed of folding machine a little or

d) Increase sheet gap of feeder

4.7 Lowering of the folding knife

>ATTENTION< Depending on product thickness a lowering of the folding knife may become necessary so that the folding sheet is transferred exactly to the foldrollers.

Through turning clamping lever **1** clockwise, the folding knife is upwards adjusted. Through turning counter-clockwise, the folding knife is downwards adjusted.

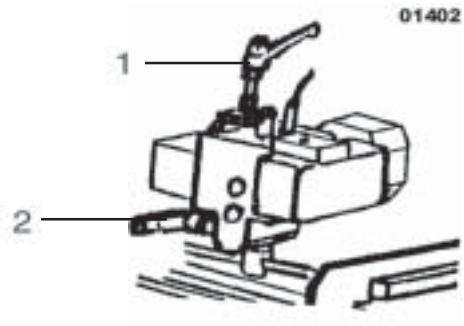

5.0 Horizontal adjustment of folding knife

>ATTENTION< Through turning clamping lever **2** it is possible to change the horizontal position of the folding unit so that the sheets are not pushed too strong against the sheet stop or pulled from it away.

If the sheet is pushed too strong against the sheet stop, the folding knife has to be set higher by turning clamping lever clockwise. If the sheet is pulled away from the sheet stop,the folding knife has to be set lower by turning clamping lever counter-clockwise.
Both possibilities of knife adjustment are possible without any tolls!

>ATTENTION< In case of extreme horizontal adjustment you should, if necessary, increase the height of the folding knife! (see 4.9)

5.1 Waving the knife folding unit

In order to produce the international 4-fold or other folding types where the knife has to work from the bottom, the complete knife unit **1** of the Z2 is waved after pulling bolt **2** in the direction of the arrow **3** until the bolt has clicked into place. Infeed height and centre of folding unit remain in same position.

Through waving the knife unit, the side length changes, however. That is the reason why the side stops have to be replaced by the enclosed - reverse - stops – fix and spring-loaded.

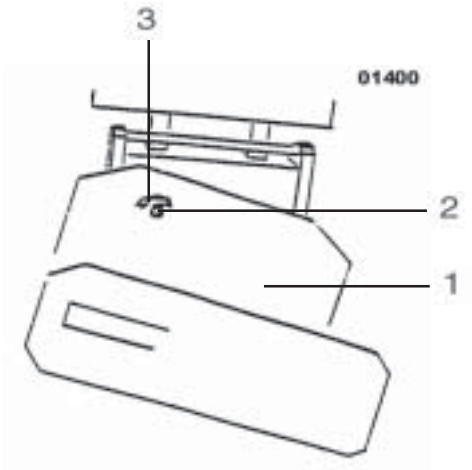

5.2 Maintenance Lubrication

This part is directed to the competent service personnel or internal authorized personnel.

>DANGER< No cleanings nor maintenance works should be carried out unless the electrical supply is isolated. Always push EMERGENCY STOP switch or main switch or pull mains plug!

5.3 Tensioning of tapes

If necessary, it is possible to re-tension the infeed tapes: Loosen hex head nut **1**. For this, turn the hexagon screw **2** clockwise.

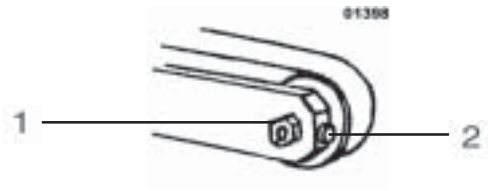

Tighten hex head nut again afterwards. If necessary the drive wheel **3** can be re-tensioned. After removing the left protection hood **4** behind the safety wheel, the hexagon screw **5** is loosened in the centre of the tension roller **6**. Afterwards the drive belt is tensioned through turning tension screw **7** clockwise.
Tighten hexagon screw in tension roller again and fix protection hood.

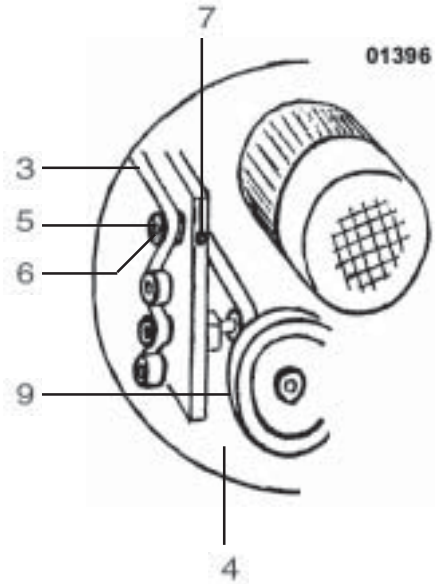

5.4 Lubrication

It is necessary to clean bearing **8** of knife guidance weekly.

>NOTICE< Use only a few drops of oil, as otherwise too much lubricants come in contact with the sheets through the knife guidance. The safety wheel at the lubrication nipple **9** has to be oiled monthly.

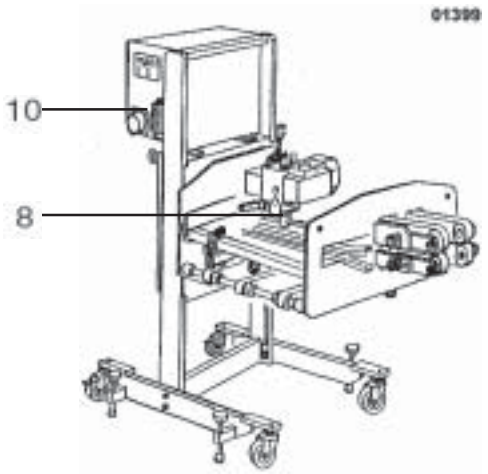

5.5 Spare parts prochurement

>NOTICE < It is absolutely imperative to indicate type and/or serial number of machine when you order spare parts – see machine label **10**.

>ATTENTION< Only use the spare parts supplied or recommended by the manufacturer.

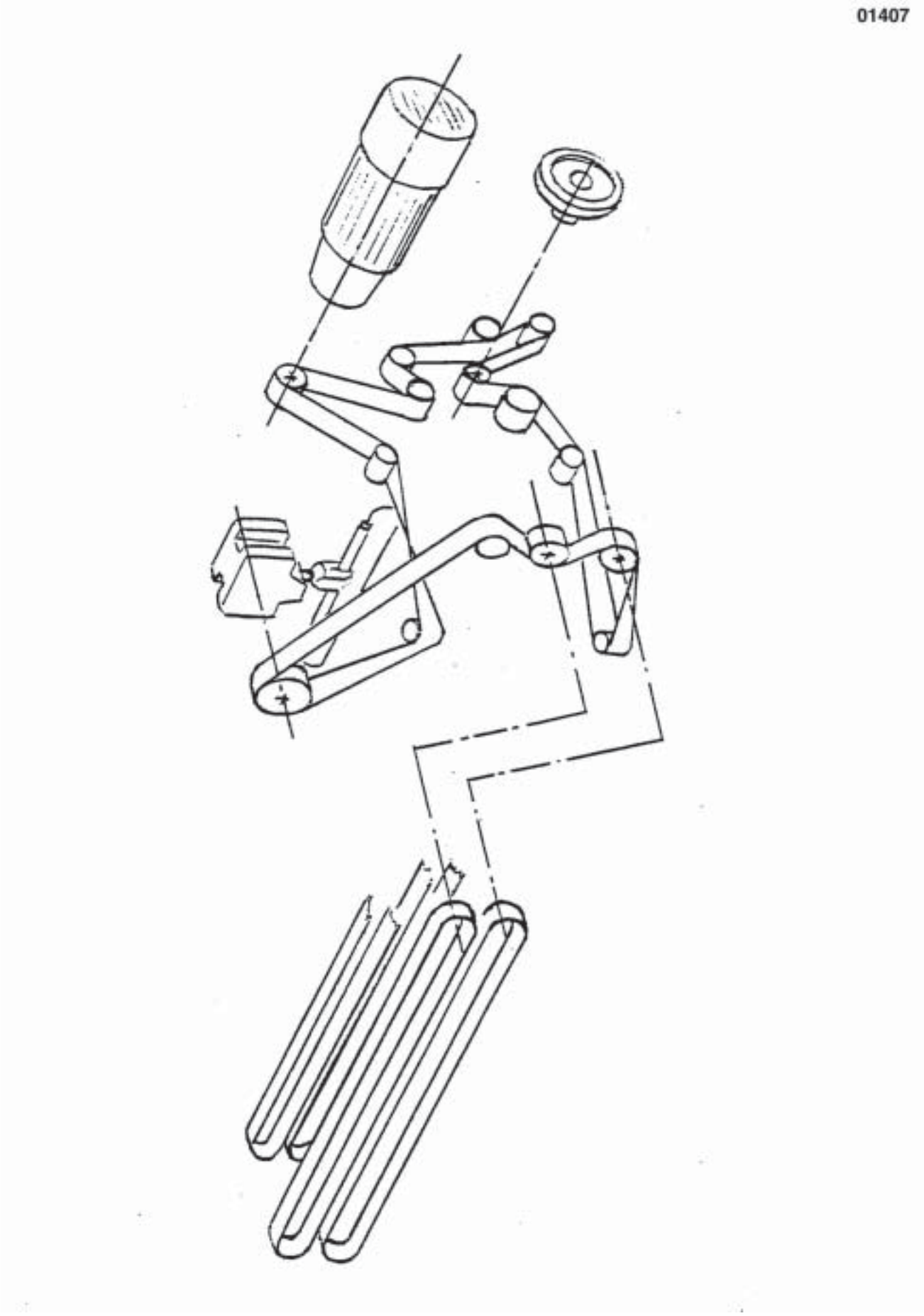
01407

5.6 Cleaning of foldrollers and transport tapes

>NOTICE< Generally, the machine should be cleaned after each job! Particularly moveable parts which have been changed due to change of sheet size, because heavy dust may cause reduction of function. Transport tapes should be cleaned only if the machine is not in motion.
The affect of printing powder or ink build-up on the foldrollers and transport tapes may decrease the quality of the folding.

The affect of printing powder or ink build-up on the foldrollers and transport tapes may decrease the quality of the folding. The tapes must be cleaned with a cleansing agent suitable for synthetic material. Please contact your machine supplier. Improper cleaner may cause discomposure or swelling of the material or destruction of the adhesive proportion.
No chemical aggressive cleaner must be used.

Protective gloves should be worn while you are cleaning.
Protect yourself against splashes or contact with the cleaning material with uncovered parts of your body. Dispose of the soiled cleaning material in the correct manner (environmentally friendly).
Consider the flammability of the cleansing agent.
Inform yourself about any eventual residual dangers of the cleansing agent from the manufacturer.

MBO, the manufacturer of this vertical stacker delivery, recommends a cleaning material for foldrollers and transport tapes made by VARN, bearing the no. **VARN-Wash VM 111** or **VWM.**
For further information please contact VARN.

6.0 Final remarks

You have now reached the end of this Operating Manual. We hope that you understood everything, if so, then our efforts to prepare this manual have been worthwile. Of course, we accept comments and wish to thank you for any suggestions to improve it. Even we are not perfect! We wish you much pleasure and success with this machine. Should you, however, still have problems with it, please do not hesitate to contact our technicians or supervisors who will be able to assist you.

Änderungen vorbehalten
Alterations reserved
sous reserve de modifications

Binder & CO.
Postfach 1169
D - 71567 Oppenweiler

Telefon 07191 / 46-0
Telefax 07191 / 4634
http://www.mbo-folder.com

Stand 05/2004 Nol/RSC

MBO
Folding Technology

Operating Manual

Z 2 Knife folding unit

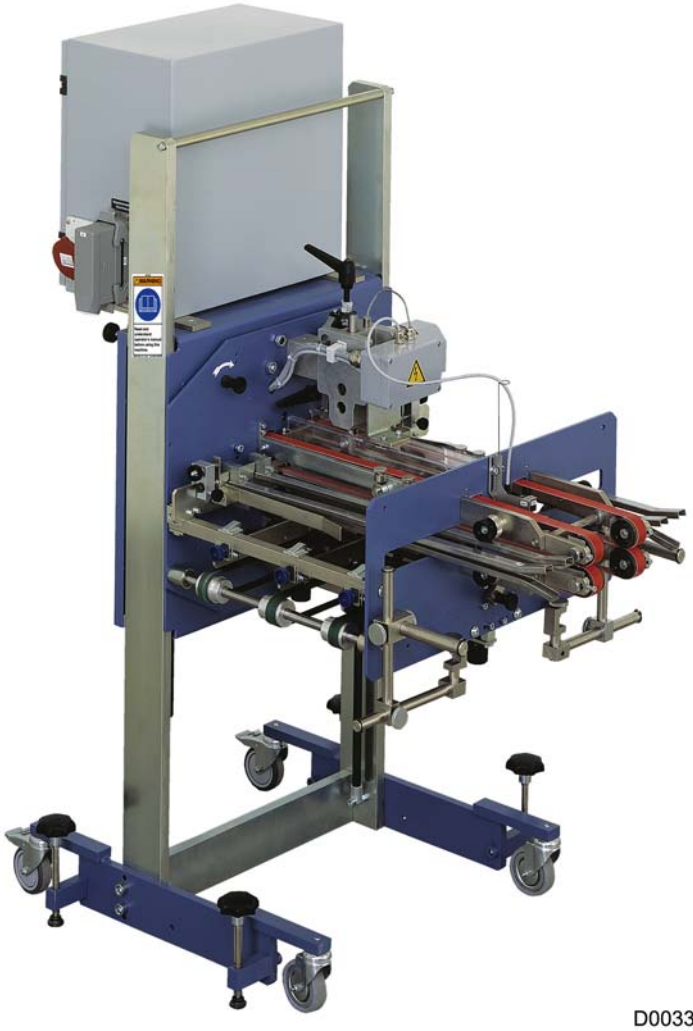

D00339

Contents

Prologue

The Z 2 Knife Folding Unit by MBO you have purchased is a valuable piece of equipment. It is absolutely imperative that you comply with all Safety Regulations and Safety Instructions. This Operating manual is designed to instruct you to correctly operate the machine, to comply with the Safety Regulations, and also to maintain the machine properly.

1.0 Machine specification

1.1 Manufacturer

MBO Binder & Co. - Maschinenbau Oppenweiler
Grabenstrasse 4, 71570 Oppenweiler
Postfach 1169, 71567 Oppenweiler
Telefon 07191/46-0
Telefax 07191 4634
E-Mail info@mbo-folder.com

1.2 Type:

Z 2 Knife folding unit

1.3 Technical Data

1.3.1 Sizes

Infeed width:	5 7/8“ min.; 18 7/8“ max.	
Infeed length:	3 1/8“ min.; 12 5/8“ max.	
Infeed height:	17 3/4“ min.; 37 3/8“ max. infinitely adjustable	
Electrical data:	0.37 kW	
Speed:	40 – 160 m/Min.	
Productivity:	max. 15.000 cycles/hour	
Weights:	**net:**	**gros:**
	240 kg	300 kg

1.3.2 Floor plan

The permitted working area during the operation is marked in grey.

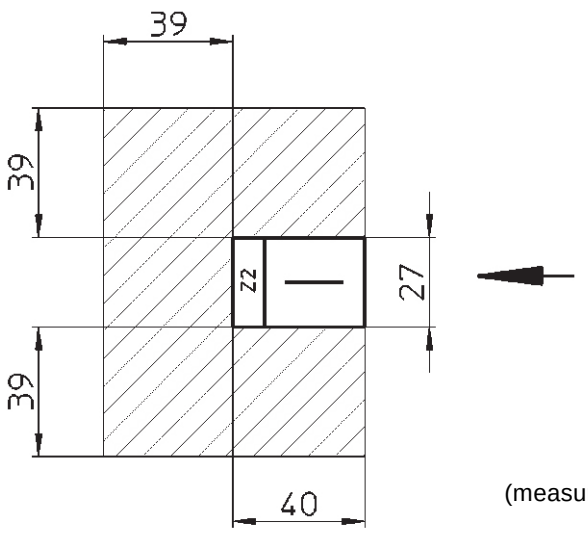

(measure in inch)

D00340

1.4 Documentation

Customer: _____

Machine configuration: **Z 2 Knife Folding**

Machine No.: _____

Serial No.: _____

BA-Batch counter IVO: _____

Electrical data:

Wiring diagram no.: _____

Operational voltage (V:/Hz:): _____

Control voltage (V:/A:): _____

Control voltage (V:/A:): _____

Total nominal current (A:): _____

Fuse at power supply (A:): _____

Wiring diagram no.: _____

CE marking no.: _____

Certificate of Conformity: _____

Noise level (dB/AI): _____

GS marking no.: _____

1.5 User information

The knife folding unit Z 2 is a separate drivable 4-fold folding machine which has its own drive for the production of different 4-folding works.

- In connection with buckle folding machines it is possible to produce the German, International or English 4-fold.
- In connection with KL and KTL version of the Combi Folding Machine, it is possible to produce the international and English 4-fold.
- In connection with the KZ version the German, International as well as the English 4-fold can be produced.

The knife folding unit Z2 can (through self-control) be placed beside other machines (for example folding machine of other manufacturers or saddle stitcher etc).

2.0 BASIC SAFETY INSTRUCTIONS

2.1 Warnings and symbols

The following designations or symbols are used for very special instructions in this Operating Manual:

>NOTICE< Special instructions in respect to the economical use of the machine.

>ATTENTION< Special instructions or requirements and prohibitions to avoid injuries and damage.

>DANGER< Instructions or requirements and prohibitions to prevent personal injuries or extensive damage.

Only skilled and instructed qualified personnel is allowed to operate the machine.
The operator must be at least 18 years old

2.2 Safety in the working place Destined use of the Vertical Stacker Delivery

2.2.1 MBO units correspond to their prescribed Safety Technical Requirement at the time of their shipment. For this purpose, any moveable and rotating parts are covered with protective hoods and are mechanically or electrically interlocked to such an extent as to not unreasonably detract from the operation.

- Single person operation only (insufficient view at the drive side).

2.2.2 With technical safety precautions it is extremely important that all operating personnel receive sufficient technical safety instructions and are advised of all potential sources of danger. However, it must be remembered that even with proper use of the machine, accidents can occur which present a danger to life and limb of the operator or third parties. Respectively, it does not exclude the detraction of the machine and other material assets.

2.2.3 The delivery should only be operated when in good working order. Any malfunctions that may impair safety must be removed immediately by trained personnel of the manufacturer/supplier.

2.2.4 The delivery is exclusively designed to handle folded paper sheets. The processing of any other materials should not be attempted as the manufacturer or supplier will not be liable for any resulting damage.

2.2.5 Carefully read the complete Operating Manual, including the Safety and Service Requirements, before you operate the machine.

2.2.6 The Operating Manual should be kept with the machine at all times.

2.2.7 Complete the Operating Manual, if necessary with internal Safety Instructions, as well as with the legal regulations for the Prevention of Accidents.

2.2.8 Make sure that all frequently substituted operators are thoroughly informed about the aforementioned subjects and trained accordingly.

2.2.9 Never remove any protective or safety devices from the delivery, and do not make any changes that may impair the safety of the delivery.

2.2.10 Never use any tools which are not in perfect condition, and make sure that no tools are left on the delivery after completion of settings and maintenance work. Tools that fall into the delivery may cause serious injuries and damage.

2.2.11 Note that all Safety Instructions are kept in a legible and visible condition.

2.2.12 Any audible and visible change on the delivery in relation to its safety must be reported immediately to the supervisor or manager of your company.

2.2.13 All operating personnel should be aware that loose clothing, jewellery or long hair can cause serious injuries if caught in the delivery.

2.2.14 It is absolutely prohibited to clean the transport tapes or pressing rollers, eliminate malfunctions, or to undertake adjustments while the delivery is in operation.

>DANGER< Therefore, always activate the **EMERGENCY STOP** button.

2.2.15 Make sure that no other person starts the delivery while you are working on it, e.g. adjustment or other works!

>DANGER< Therefore, always activate the **EMERGENCY STOP** button, or turn **OFF** the main switch, or unplug the delivery.

2.2.16 Do not immediately turn the delivery ON if it has stopped for any inexplicable reason. Make sure that the delivery is in good working condition and that no other person is working on the delivery.

2.2.17 Turn off the main switch and secure it, if necessary, with a lock if you are required to undertake extensive mechanical or electrical maintenance and repair work.

2.2.18 Never open the main or subcontrol panel! Only authorised personnel should gain access to electronic control cabinets as there are no user serviceable parts.

>DANGER< if control cabinet is open! All main terminals could be alive even though the mains switch has been turned off.

2.2.19 Any damaged cables or electrical connections must be reported to the appropriate supervisor of your company.

2.2.20 Machine connections must be installed in such a manner that no cables, tubes or hoses are left trailing.

2.3 Safety Device

2.3.1 Protection hoods – Overview

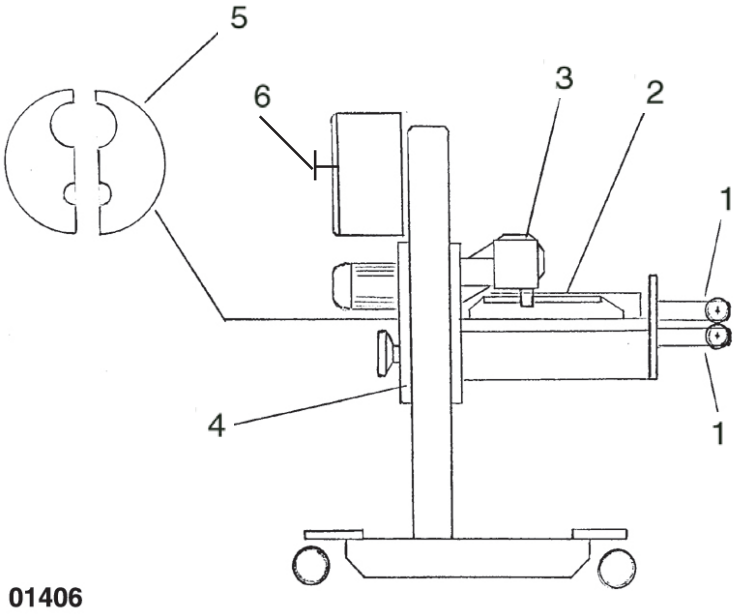

2.3.2 Protection hoods – check list

Pos.	Identification	Function control	Visual control	Result	Remarks
1	Protection infeed- Belt crack				
2	Protection knife				
3	Protection belt				
4	Cover				
5	Protection drive - part				
6	EMERGENCY-STOP switch				in the operator field
	Date	Name			Signature

2.3.3 Check list: warning labels (oder warning signs)

Pos.	Warnings	Introduction At first commissioning (oder at initial operation) (first customer)	Note
1	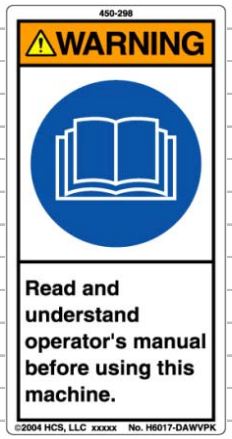		
2			
3			
		Date:	
		Name:	
		Signature:	

Pos. 1

Significance:
Please read and understand the operating manual before you start to work on the machine.

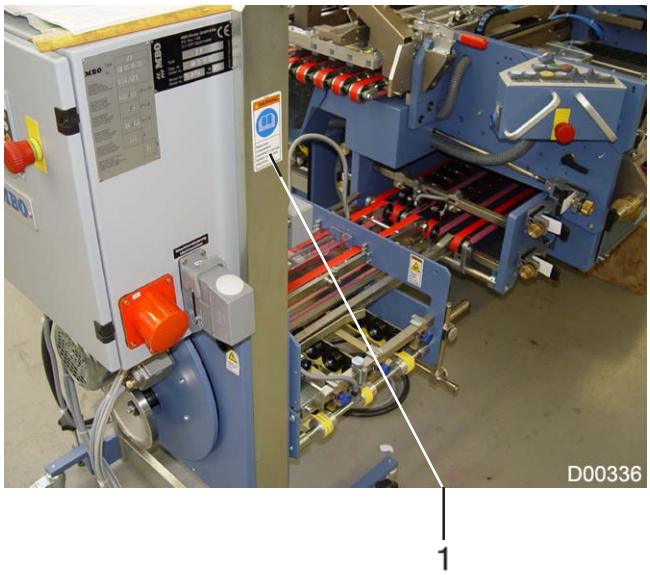

Pos. 2

Significance:
Danger of rotating machine shafts. In case of non-observance, limbs can be torn open or torn off. Keep away your hands from the shaft.

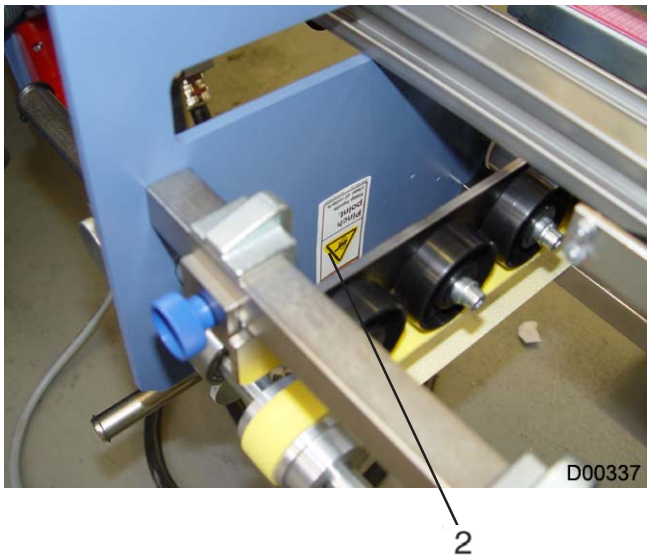

Pos. 3

Significance:
Work only with a tightened lever.
Danger of jerky height adjustment in case of non-tightened lever.

3.0 Transport, Installation and initial operation

This part of the Operating Manual is specifically directed to service personnel and internal authorised personnel responsible for transportation and installation.

3.1 Transport

The complete knife folding unit **1** is shipped on a pallet or in a crate. Carry the unit as close as possible to its final position by moving with a fork lift.

Unscrew the folding unit off the pallet, lift it up unilaterally and put under stabile blocks of wood, screw on enclosed machine rolls **2** to trolley **3**. Take out blocks of wood and repeat this process on the other side. Roll folding unit from pallet.

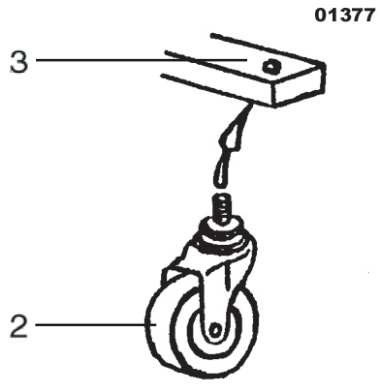

>DANGER< You may sustain personal injuries or the delivery may tip over! Two persons are required to brace the folding unit.

3.2 Erection

The knife folding unit Z 2 is positioned at the respective exit of the folding machine. Before the position of Z2 is secured through brakes of machine rolls **4,** it is necessary to take care:

>NOTICE< that the middle of the folding unit and the middle (or folding line) of the sheet coming from the preceding folding unit agree with each other.

After positioning the knife folding unit, the Z2 is lifted up from the machine rolls through the four setting screws **5.** After loosing both knurled screws **6**, the infeed height is adjusted – push down or pull up at the frame of the folding unit which is leaned (based) on two gas struts.

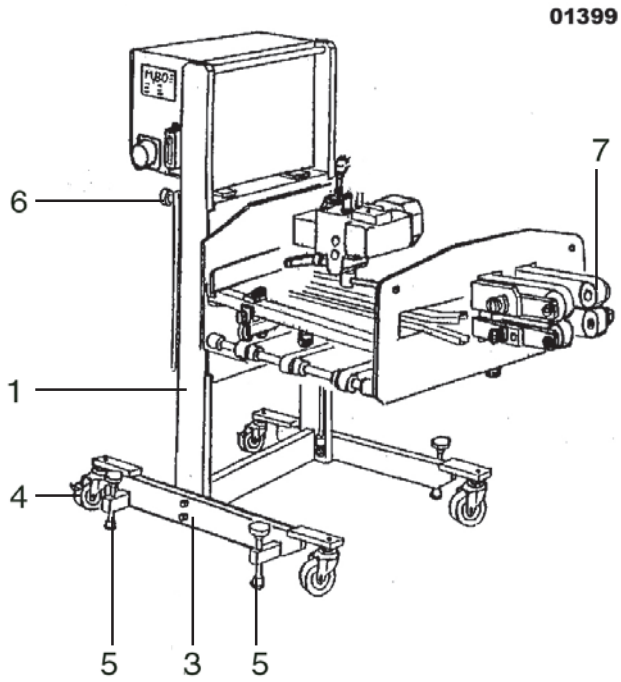

>NOTICE< The infeed level of transport tapes **7** should agree to the outlet level of the preceding folding unit.

3.3 Installation

Clean the knife folding unit with rust preventing agents.

3.4 Electrical connection

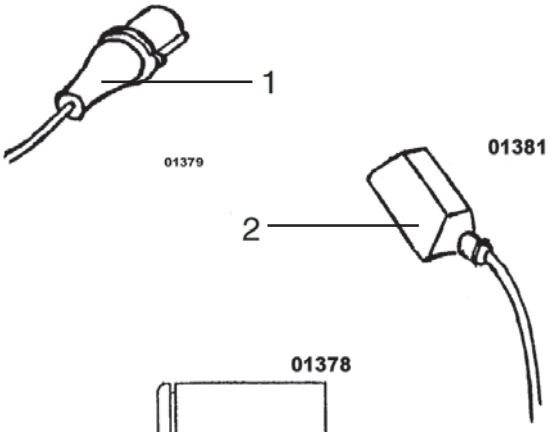

The knife folding unit Z2 is connected with the MBO folding machine through the round power plug **1** and the rectangular control plug **2**.

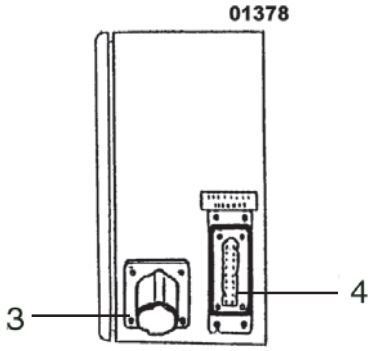

The MBO delivery placed at (beside) the Z2 is connected with the round power socket **3** and the rectangular control socket **4** „machine control“.

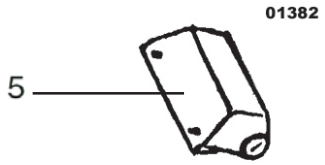

If no MBO delivery is used behind the Z2, the dummy plug **5** (without cable) has to be inserted. Due to its own drive, the Z2 may also be used in other machines.

For this purpose, insert power plug to power supply **7** and control plug into „self control“ socket **6** at control panel.

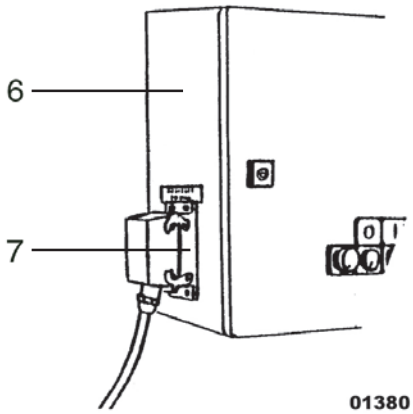

>DANGER< Please bear in mind that, in case of use in other machines, there is no joint disconnection of the knife folding unit Z2 and the foreign machine! Manufacturer and supplier will not be liable for any damages or injuries caused by the missing of safety disconnection!

4.0 Operation (Handling of the machine)

4.1 Control panel

The following control elements are fixed at the control cabinet:

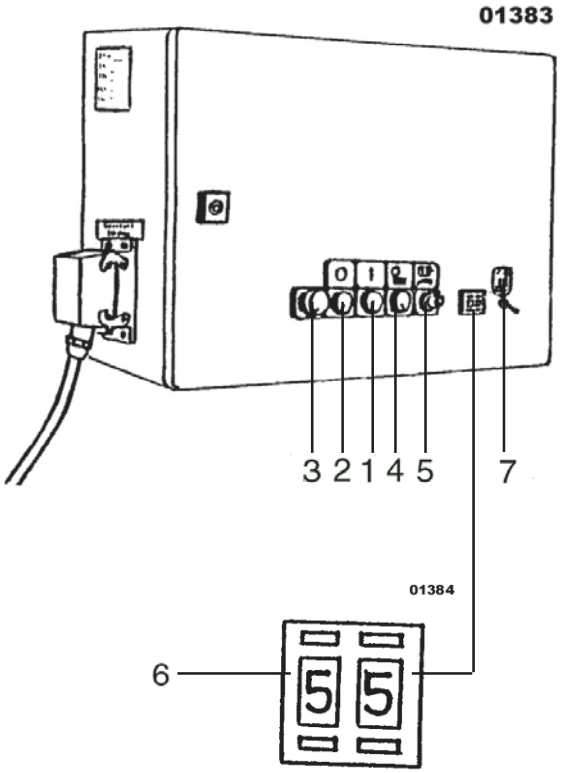

1 Black button for machine ”**START**”

2 Red button for machine ”**STOP**”

3 Red mushroom button with interlock for ”**EMERGENCY STOP**”

4 White button for sheet infeed

>NOTICE< Only if Z2 is connected with a MBO folding machine.

5 Potentiometer for infinite speed regulation

6 Decade switch for control of knife release (minimum value must be 43). For calming down the sheet under the knife, this value can be increased. A release of the knife is thus achieved.

7 Toggle switch with 3 control positions

a) Position up:

Position of switch during production

b) Position middle:

Knife is „OFF“, i.e. in order to stop a sheet under the knife while making ready.

c) Position down:

Brief jogging down and afterwards up **(a)** results in the release of only one knife cycle while making ready.

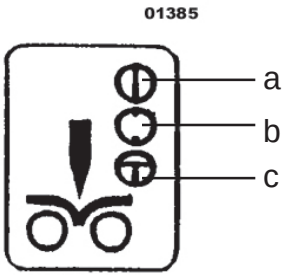

4.2 Adjustment of foldrollers

Through turning the safety hand wheel **1** manually and feeling the respective product thickness through setting screws **2**, the foldrollers are adjusted uniformly on both sides.
These are located under or above the foldrollers.

>NOTICE< Thin paper needs less pressure of foldrollers than thick paper.

>DANGER< Never carry out foldroller settings while machine is still running!
Machine must be turned OFF!
Use EMERGENCY-STOP switch while setting!

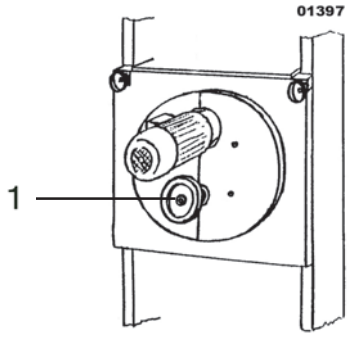

4.3 Sheet infeed

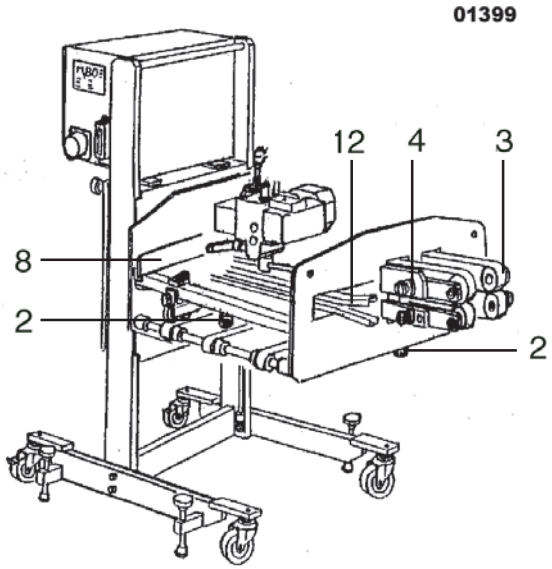

The inner width of the infeed tapes **3** is set to thickness of processed product through knurled screw and excenter **4**.

Additionally, sheet infeed or transport can be set through lowering or increasing the transport rolls **5**.
Loosen screw with hexagon screw **6** on the axis of the roller and adjust it through knurled screw **7**.
The brushes **9** are set at the rear edge of the sheet so that the sheets can not bounce back from stop **8**.
Then, a sheet is manually turned in and the lateral sheet stops **10** (fixed stop) and **11** (spring stop) are adjusted.

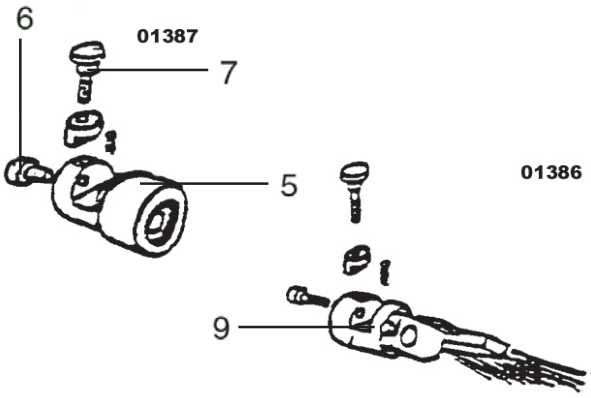

The sheet should possibly run exactly to the fixed stop, the rest is pressed on by the spring stop. The control rails **12** are inserted under and above the sheet to be folded so that the sheets are lying exactly horizontal under the knife and do not swerve to the top or sag down.

If the sheet is not folded exactly at the desired place, both side stops have to be checked and re-adjusted.

>NOTICE< For this, please consider that the sheet runs exactly inside the fixed stop furthermore after adjusting the side stops. Through lateral relocating of the complete folding unit, a readjustment is possible. For this, loosen connection elements to folding machine (see 4.5).

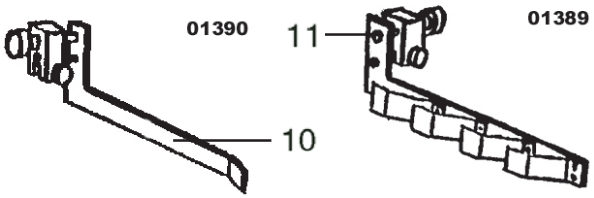

4.4 Sheet outlet

After running through the foldrollers, the sheet reaches the left or right exit belts **2** through a deflecting sheet metal which is changeable through lever **1**.

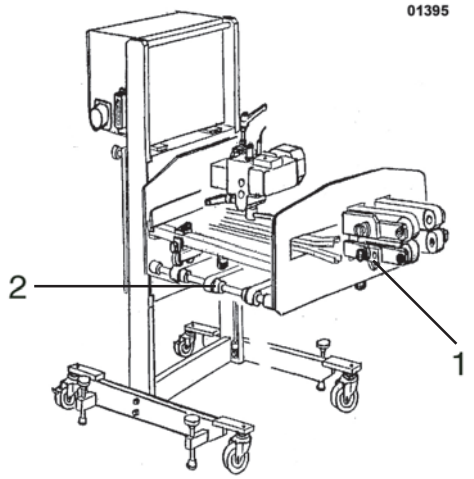

These ones have to be adjusted to the size of the sheet to be folded after loosening the screws in tape rollers **3**.

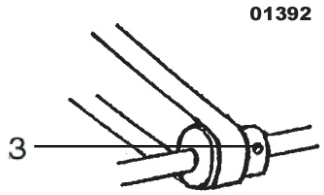

The roller tracks **4** are set on these exit belts.

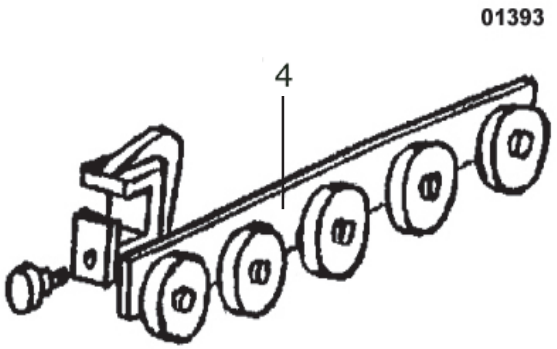

4.5 Position securing

>**NOTICE**< After terminating all adjustments, the knife folding unit is fastened at the cross bar of the preceding folding unit **6** through connection elements **5** and thus secured against unintended moving.

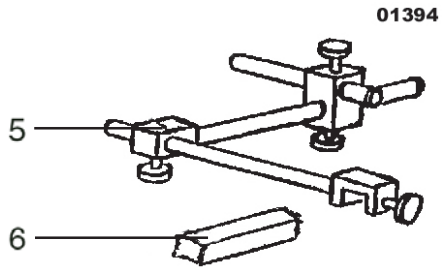

4.6 Knife control

Folding unit **1** operates independently. The knife motion is activated by photocell **2** at the entrance of the Z2.

Set the time of release as follows: The path between photocell and sheet stop is a fix gap of 43 cm. Enter this value into the digital push button **3** through push buttons. Function control - after the folding sheet has passed the photocell.

If the red LED at the amplifier **4** expires, the calculator is turned ON. After the path of 43 cm is passed, the knife is activated and moves down.

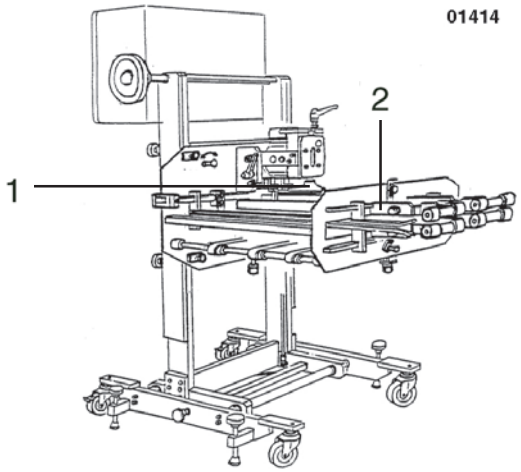

>NOTICE< If a longer levelling time of the sheet is to be achieved, enter a larger value (for example 50 cm, or more)

>ATTENTION< At very high levelling times, a collision of the following sheet with the folding knife or with the outcoming sheet may appear under certain circumstances.

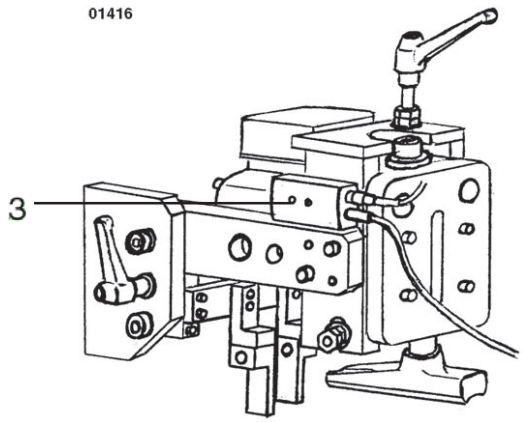

Remedy:

a) Reduce levelling time (if possible)

b) Increase speed of Z2 (if possible) a little.

c) Reduce speed of folding machine a little or

d) Increase sheet gap of feeder

4.7 Lowering of the folding knife

>ATTENTION< Depending on product thickness a lowering of the folding knife may become necessary so that the folding sheet is transferred exactly to the foldrollers.

Through turning clamping lever **1** clockwise, the folding knife is upwards adjusted. Through turning counter-clockwise, the folding knife is downwards adjusted.

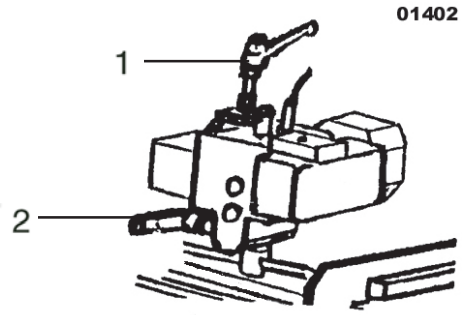

4.8 Horizontal adjustment of folding knife

>ATTENTION< Through turning clamping lever **2** it is possible to change the horizontal position of the folding unit so that the sheets are not pushed too strong against the sheet stop or pulled from it away.

If the sheet is pushed too strong against the sheet stop, the folding knife has to be set higher by turning clamping lever clockwise. If the sheet is pulled away from the sheet stop,the folding knife has to be set lower by turning clamping lever counter-clockwise.
Both possibilities of knife adjustment are possible without any tolls!

>ATTENTION< In case of extreme horizontal adjustment you should, if necessary, increase the height of the folding knife! (see 4.9)

4.9 Waving the knife folding unit

In order to produce the international 4-fold or other folding types where the knife has to work from the bottom, the complete knife unit **1** of the Z2 is waved after pulling bolt **2** in the direction of the arrow **3** until the bolt has clicked into place. Infeed height and centre of folding unit remain in same position.

Through waving the knife unit, the side length changes, however. That is the reason why the side stops have to be replaced by the enclosed - reverse - stops – fix and spring-loaded.

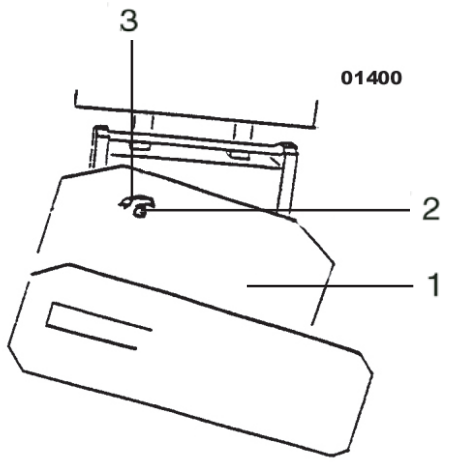

5.0 Maintenance Lubrication

This part is directed to the competent service personnel or internal authorized personnel.

>DANGER< No cleanings nor maintenance works should be carried out unless the electrical supply is isolated. Always push EMERGENCY STOP switch or main switch or pull mains plug!

5.1 Tensioning of tapes

If necessary, it is possible to re-tension the infeed tapes: Loosen hex head nut **1**. For this, turn the hexagon screw **2** clockwise.

Tighten hex head nut again afterwards. If necessary the drive wheel **3** can be re-tensioned. After removing the left protection hood **4** behind the safety wheel, the hexagon screw **5** is loosened in the centre of the tension roller **6**. Afterwards the drive belt is tensioned through turning tension screw **7** clockwise.
Tighten hexagon screw in tension roller again and fix protection hood.

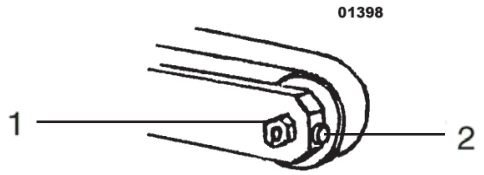

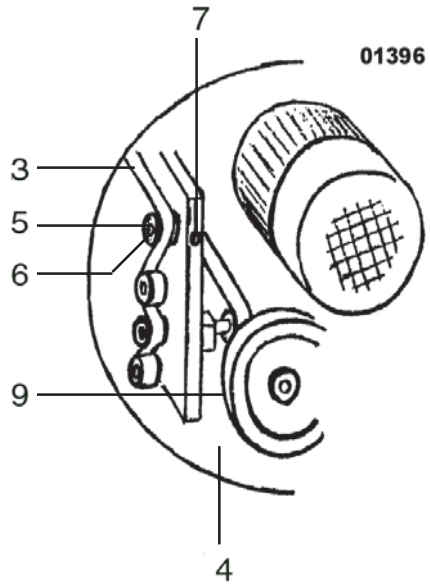

5.2 Lubrication

It is necessary to clean bearing **8** of knife guidance weekly.

>NOTICE< Use only a few drops of oil, as otherwise too much lubricants come in contact with the sheets through the knife guidance. The safety wheel at the lubrication nipple **9** has to be oiled monthly.

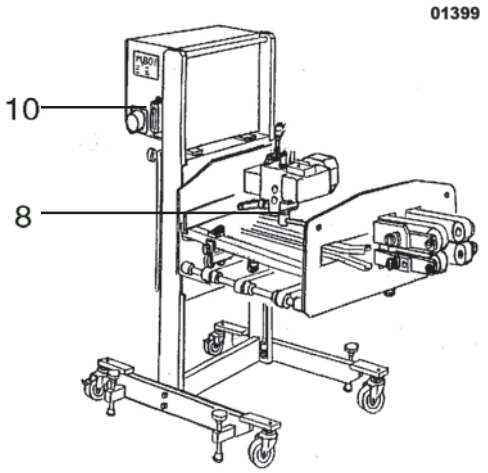

5.3 Spare parts prochurement

>NOTICE < It is absolutely imperative to indicate type and/or serial number of machine when you order spare parts – see machine label **10**.

>ATTENTION< Only use the spare parts supplied or recommended by the manufacturer.

01407

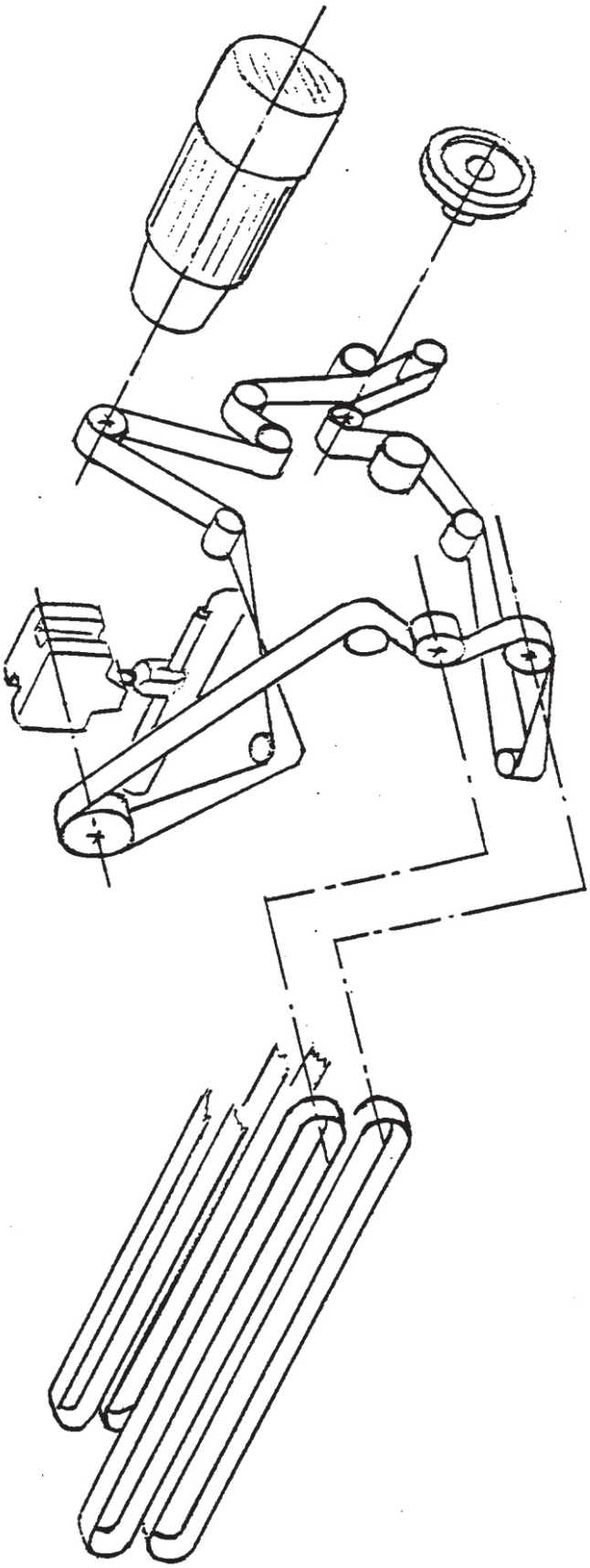

5.4 Cleaning of foldrollers and transport tapes

>NOTICE< Generally, the machine should be cleaned after each job! Particularly moveable parts which have been changed due to change of sheet size, because heavy dust may cause reduction of function. Transport tapes should be cleaned only if the machine is not in motion.
The affect of printing powder or ink build-up on the foldrollers and transport tapes may decrease the quality of the folding.

The affect of printing powder or ink build-up on the foldrollers and transport tapes may decrease the quality of the folding. The tapes must be cleaned with a cleansing agent suitable for synthetic material. Please contact your machine supplier. Improper cleaner may cause discomposure or swelling of the material or destruction of the adhesive proportion.
No chemical aggressive cleaner must be used.

Protective gloves should be worn while you are cleaning.
Protect yourself against splashes or contact with the cleaning material with uncovered parts of your body. Dispose of the soiled cleaning material in the correct manner (environmentally friendly).
Consider the flammability of the cleansing agent.
Inform yourself about any eventual residual dangers of the cleansing agent from the manufacturer.

MBO, the manufacturer of this vertical stacker delivery, recommends a cleaning material for foldrollers and transport tapes made by VARN, bearing the no. **VARN-Wash VM 111** or **VWM.**
For further information please contact VARN.

5.5 Putting out of service

5.6 Details of storage

- Check the premises in respect of temperature and humidity. The ideal storing temperature rests between +15°C and +28°C. The higher the humidity the greater the danger of corrosion.
- It is essential that you take the weight details of the machine into con-sideration in respect of the maximum load capacities.
- It is essential that you take the size details of the machine into consid-eration in respect of the maximum load capacities.
- Prepare the gears/transmission for storage. You should also take into consideration that the pre-requisites vary from case to case. Therefore, please contact the supplier of the gears/ transmission and motor and fol-low the respective manual.
- Clean dirt and dust carefully from the machine; do not use water - dan-ger of corrosion.
- Ensure that only an electrician disconnects the machine from the power supply.
- Use a fork lift to transport the machine.
- Cover the machine with foil.

5.7 Environmental waste disposal

Dispose of single machine parts and all occurring waste materials from the K 800.2 Combi folding machine environmentally according to:

For European Community member countries:	▪ 75/442 EEC ▪ 91/156 EEC ▪ 91/692 EEC in connection with the country and district specific Waste Disposal Acts.
For non-EC member countries:	Compatible with the country and district specific Waste Disposal Acts.

Ask about the possibility of municipal disposal or waste disposal by private waste disposal companies.

On this occasion you should differ between:

- Destruction (destruction of records)
- Recycling (plastic packaging materials)
- Disposal (disposal of harmful substances)

5.7.1 Disposal of the waste machine

You may dispose of the waste machine:

- Through the supplier
- Through a disposal and demolition company, or
- Through your own company

5.7.2 Disposal by instructing the supplier

Instruct your supplier to dispose of the machine. The waste machine will be either part-exchanged or professionally disassembled and environmentally disposed of.
As a result you are spared any further trouble.

5.7.3 Disposal by a disposal and demolition company

You may also instruct one of the nearby disposal and demolition companies who are also familiar with this special field.

5.7.4 Disposal by your own company

You also have the alternative of demolishing the waste machine by your own expert personnel on your own premises.

However, you should bear in mind that in some places you may require a separate official permit for transportation and disposal. Make sure to obtain written confirmation of your professional disposal.

5.7.5 Ground water preservation

Please comply with the applicable provisions and acts to avoid ground water pollution:

For European Community member countries:	. 80/68 EEC . 90/656 EEC . 91/692 EEC . 96/350 EC . 96/59 EC in connection with the country and district specific Waste Disposal Acts.
For non-EC member countries:	Compatible with the country and district specific Waste Disposal Acts for the ground water protection.

5.8 Final remarks

You have now reached the end of this Operating Manual. We hope that you understood everything, if so, then our efforts to prepare this Manual have been worthwhile. Of course, we accept comments and wish to thank you for any suggestions to improve it. Even we are not perfect! We wish you much pleasure and success with this machine. Should you, however, still have problems with it, please do not hesitate to contact our technicians or supervisors who will be able to assist you.

MBO-Group worldwide

MBO Deutschland

MBO Binder GmbH & Co. KG
Postfach 1169
D-71567 Oppenweiler

Tel.: +49 (0) 71 91 / 46 – 0
Fax: +49 (0) 71 91 / 46 – 34

http://www.mbo-folder.com
info@mbo-folder.com

MBO Portugal

MBO Binder GmbH & Co.
Maquinas Graficas, Lda
Rua Joaquim Alves da Silva 240, 420 e 570
P-4455-473 Perafita / Portugal

Tel.: +351 (22) 99 82 - 200
Fax: +351 (22) 99 82 - 201

info@mbo-folder.com

MBO Amerika

MBO Binder GmbH & Co. of America
400 Highland Drive
Westampton, NJ 08060 / USA

Tel.: +1 (6) 09267 - 2900
Fax: +1 (6) 09 267 - 14 77

http://www.mboamerica.com

MBO Frankreich

MBO France SAS
Z. A. Burospace n° 3
Route de Gisy B.P. 33
F-91571 Bievres Cedex

Tel.: +33 (1) 69 35 50 - 90
Fax: +33 (1) 69 35 50 - 99

info@mbofrance.fr

MBO Herzog & Heymann

Herzog & Heymann GmbH + Co. KG
Postfach 110355
D-33663 Bielefeld

Tel.: +49 (0) 71 91 / 46 – 0
Fax: +49 (0) 71 91 / 46 – 34

http://www.herzog-heymann.com
info@herzog-heymann.com

Stand 10/2006 Haug/Nol